HECTOR FINCH

SIR JOHN SOANE HANGING LANTERN LARGE

PRODUCT CODE LA92L

CATEGORY: HANGING LANTERNS

DIMENSIONS

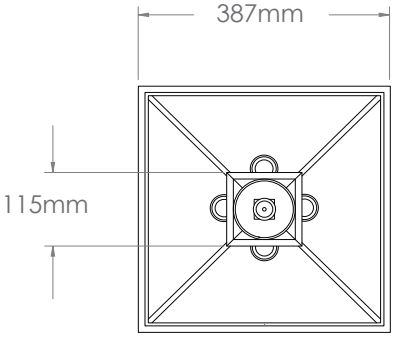

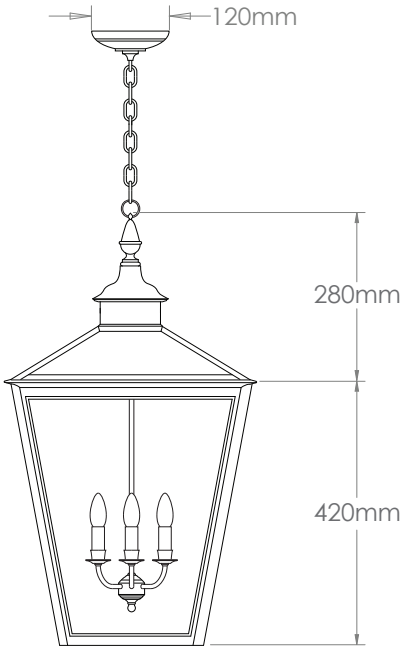

HECTOR FINCH

PRODUCT CODE LA92L

CATEGORY: HANGING LANTERNS

SIR JOHN SOANE HANGING LANTERN LARGE

LAMP TYPE	**UK / EU** 4 x 40W (Max) E14 Candle
FINISH OPTIONS	Antique Brass, Bronze and Zinc (shown).
SIZE & SIMILAR OPTIONS	Sir John Soane Wall Lantern (WL275), Sir John Soane Hanging Lantern Small (LA92S) and Sir John Soane Hanging Lantern With Roof on Bracket (WL460).
WEIGHT	8.5kg
ADDITIONAL INFORMATION	Supplied with 600mm of chain and canopy as standard. Minimum overall drop from the ceiling to the bottom 764mm. Suitable for indoor and outdoor undercover use.
CLEANING AND MAINTENANCE INSTRUCTIONS	Glass: Remove the glass where it is safe to do so. The glass then can be cleaned with a glass cleaner and a lint free cloth. Do not spray glass cleaner directly on the glass or fixture as it could affect the metal finish. Ensure the light is switched off and take care not to pull the flex or allow water to come into contact with the electrical components. Regular dusting with a feather duster will also help keep the glass clean. Metalwork: We recommend a light polish with a non-abrasive lint free cloth. Do not use any metal cleaning products on the fixture as it can remove the finish entirely. Unlacquered brass finish will patinate slowly over time and can be brightened to brass by the use of a brass cleaning agent.