HECTOR FINCH

ZEUS HANGING LANTERN MEDIUM

PRODUCT CODE LA93M

CATEGORY: HANGING LANTERNS

DIMENSIONS

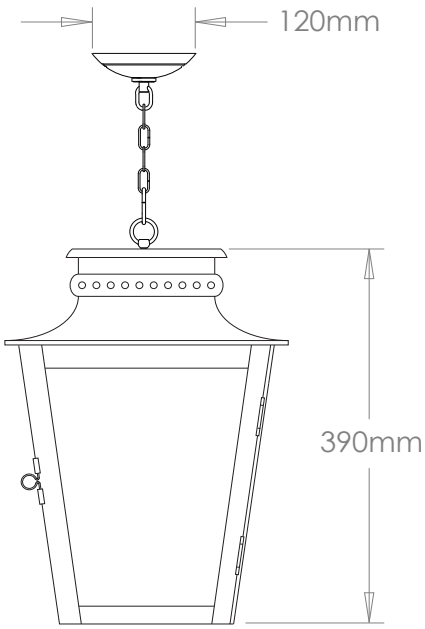

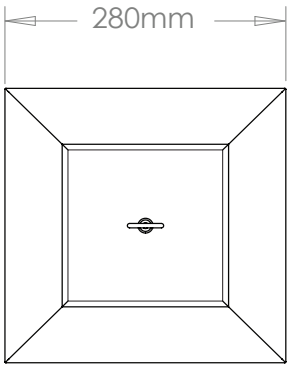

HECTOR FINCH

PRODUCT CODE LA93M

CATEGORY: HANGING LANTERNS

ZEUS HANGING LANTERN MEDIUM

LAMP TYPE	**UK / EU** 2 x 40W (Max) E14 Candle
FINISH OPTIONS	Antique Brass, Black and Zinc (shown).
SIZE & SIMILAR OPTIONS	Zeus Hanging Lantern Small (LA93S), Zeus Hanging Lantern Large (LA92L), Zeus Lantern on Post Mount (WL308), Zeus Wall Lantern (WL258), Zeus Hanging Lantern on Bracket (WL293) and Zeus Lantern on Lower Bracket (WL295).
WEIGHT	4kg
ADDITIONAL INFORMATION	Supplied with 600mm of chain and canopy as standard. Minimum overall drop from the ceiling to the bottom 480mm. Suitable for indoor and outdoor undercover use.
CLEANING AND MAINTENANCE INSTRUCTIONS	Glass: Remove the glass where it is safe to do so. The glass then can be cleaned with a glass cleaner and a lint free cloth. Do not spray glass cleaner directly on the glass or fixture as it could affect the metal finish. Ensure the light is switched off and take care not to pull the flex or allow water to come into contact with the electrical components. Regular dusting with a feather duster will also help keep the glass clean. Metalwork: We recommend a light polish with a non-abrasive lint free cloth. Do not use any metal cleaning products on the fixture as it can remove the finish entirely. Unlacquered brass finish will patinate slowly over time and can be brightened to brass by the use of a brass cleaning agent.