HECTOR FINCH

TIBER PENDANT LARGE



PL134L

DIMENSIONS

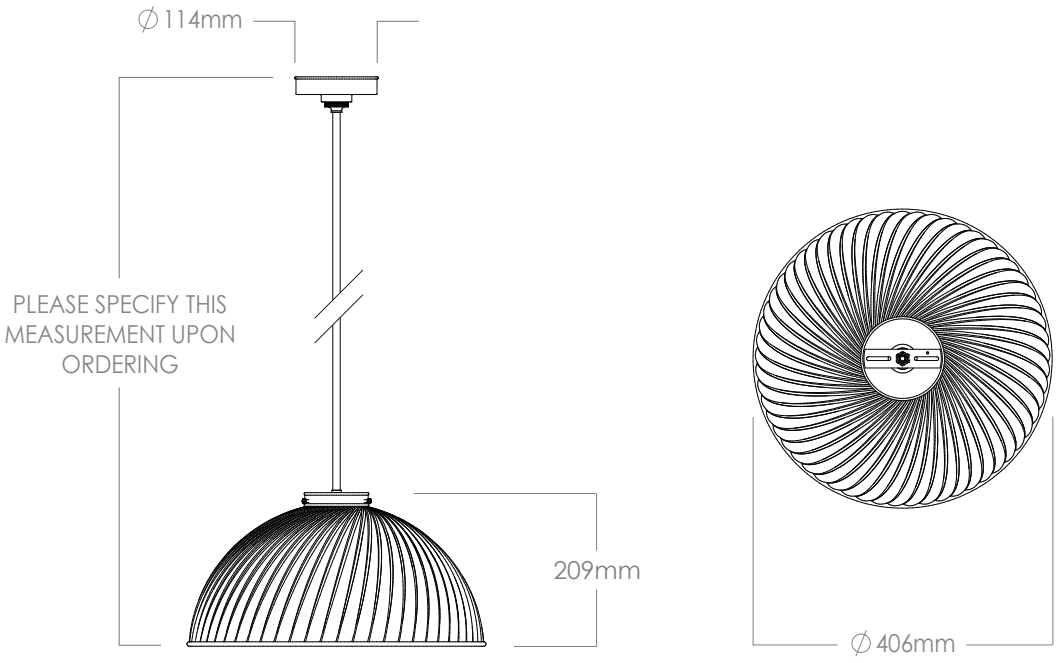

TIBER PENDANT LARGE

DIMENSIONS

Width	**406mm**
Height	**To be specified**

MOUNTING

Weight	**5kg**
Ceiling canopy	**114mm**

RATING

Voltage	**220v - 240v / 50Hz**

FINISH OPTIONS

Brass Polished Lacquered
Brass Polished Unlacquered
Antique Brass
Bronze (shown)
Nickel Polished
Nickel Matte

COLOUR OPTIONS


Grey


Green

SIZE & SIMILAR OPTIONS

Tiber Pendant Small (PL134S), Tiber Pendant With Gold Interior (PL135), Tiber Wall Light (WL72), Tiber Wall Light Double (WL14), Tiber Flush Wall Mounted (WL423), Tiber Flush Ceiling Mounted (CL25), Mini Tiber Flush Mount (CL30), Mini Tiber Wall Light (WL17), Double Tiber Pendant on a Rod (PL405) and Triple Tiber Pendant on a Rod (PL428).

LAMP TYPE

Lamp supplied: NO
Hector Finch recommends
1 x 6W E27 LED Golfball

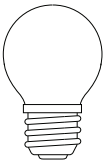

ADDITIONAL INFORMATION

Please specify total drop from the ceiling to the bottom of the globe. Minimum overall drop from the ceiling to the bottom of the globe 410mm.

CLEANING AND MAINTENANCE INSTRUCTIONS

Glass:
Remove the glass where it is safe to do so. The glass then can be cleaned with a glass cleaner and a lint free cloth. Do not spray glass cleaner directly on the glass or fixture as it could affect the metal finish. Ensure the light is switched off and take care not to pull the flex or allow water to come into contact with the electrical components. Regular dusting with a feather duster will also help keep the glass clean.

Metalwork:
We recommend a light polish with a non-abrasive lint free cloth. Do not use any metal cleaning products on the fixture as it can remove the finish entirely. Unlacquered brass finish will patinate slowly over time and can be brightened to brass by the use of a brass cleaning agent.