HECTOR FINCH

HECTOR GLASS GLOBE MINI OPAL GLASS 5”

PRODUCT CODE PL143/5”

CATEGORY: CHANDELIERS & PENDANTS

DIMENSIONS

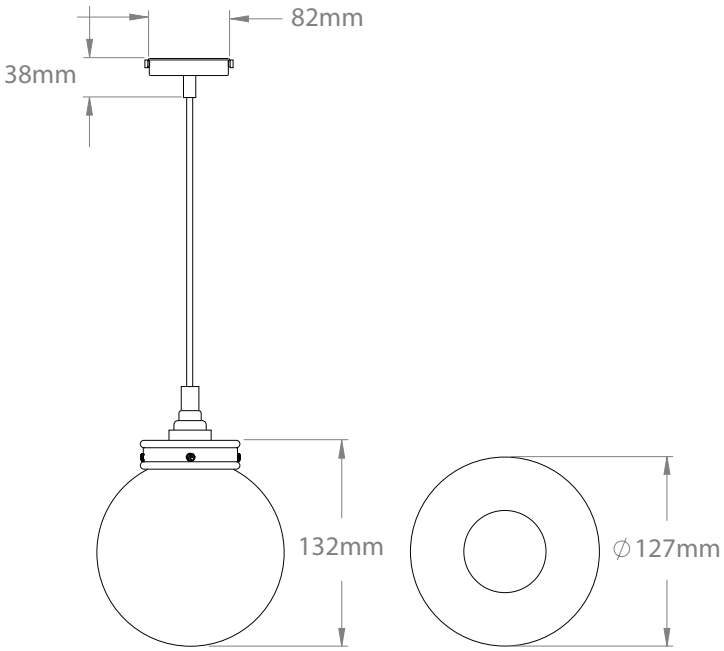

HECTOR FINCH

PRODUCT CODE PL143/5"

CATEGORY: CHANDELIERS & PENDANTS

HECTOR GLASS GLOBE MINI OPAL GLASS 5"

LAMP TYPE	**UK / EU** 1 x 40W E14 Golfball
FINISH OPTIONS	Brass Polished Lacquered (shown), Brass Polished Unlacquered, Antique Brass, Bronze, Chrome, Nickel Polished and Nickel Matte.
SIZE & SIMILAR OPTIONS	Hector Mini Globe Pendant 8" (PL143) and Hector Mini Globe Wall Light Opal Glass (WL425).
WEIGHT	1kg
ADDITIONAL INFORMATION	Supplied with .5m cable with cord grip lampholder and ceiling plate. Is supplied with IP44 Osh Lamp as standard for use in zone 2 within bathrooms.
CLEANING AND MAINTENANCE INSTRUCTIONS	Glass: Remove the glass where it is safe to do so. The glass then can be cleaned with a glass cleaner and a lint free cloth. Do not spray glass cleaner directly on the glass or fixture as it could affect the metal finish. Ensure the light is switched off and take care not to pull the flex or allow water to come into contact with the electrical components. Regular dusting with a feather duster will also help keep the glass clean. Metalwork: We recommend a light polish with a non-abrasive lint free cloth. Do not use any metal cleaning products on the fixture as it can remove the finish entirely. Unlacquered brass finish will patinate slowly over time and can be brightened to brass by the use of a brass cleaning agent.