HECTOR FINCH

# **PAOLA PENDANT** SMALL

**PRODUCT CODE PL350S**

**CATEGORY: CHANDELIERS & PENDANTS**

**DIMENSIONS**

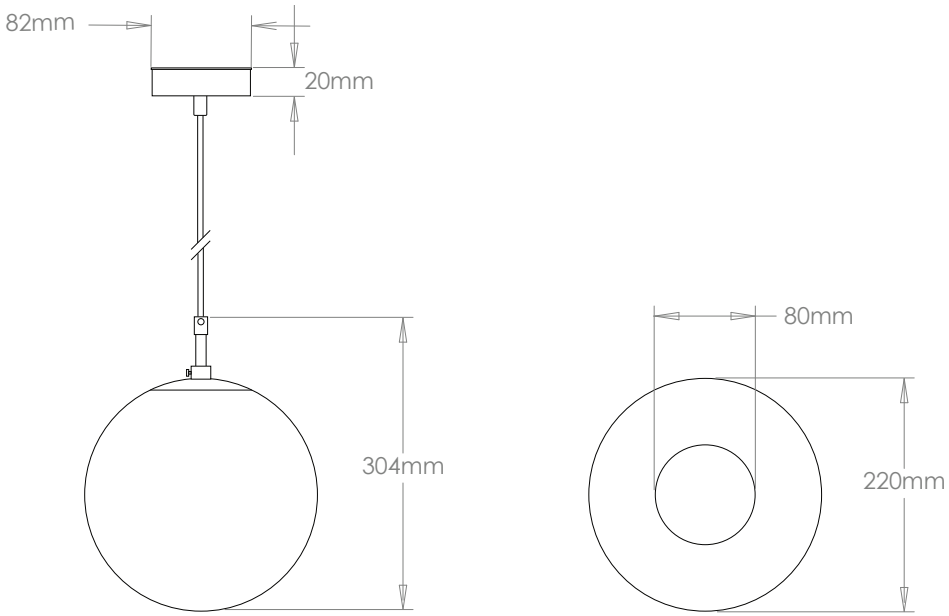

HECTOR FINCH

PRODUCT CODE PL350S

CATEGORY: CHANDELIERS & PENDANTS

# **PAOLA PENDANT** SMALL

| | |
|---|---|
| **LAMP TYPE** | **UK / EU**<br>1 x 60W (Max) E27 General Service |
| **FINISH OPTIONS** | Brass Polished Lacquered, Brass Polished Unlacquered, Antique Brass (shown), Bronze, Chrome, Nickel Polished and Nickel Matte. |
| **COLOUR OPTIONS** | Grigio<br> Viola<br> Clear<br> Blu Avio<br> Marrone<br> Turchese |
| **SIZE & SIMILAR OPTIONS** | Paola Pendant Large (PL350L), Paola Wall Light (WL401), Paola Wall Light Large (WL401L), Paola Palantir 3 Light Cluster (PL427) and Paola Palantir 5 Light Cluster (PL439). |
| **WEIGHT** | 4.5kg |
| **ADDITIONAL INFORMATION** | Supplied with 900mm cable with cord grip lampholder and ceiling plate. Please note these globes are individually hand-blown and may contain small imperfections which are part of the glass-blowing process. |
| **CLEANING AND MAINTENANCE INSTRUCTIONS** | Glass:<br>Remove the glass where it is safe to do so. The glass then can be cleaned with a glass cleaner and a lint free cloth. Do not spray glass cleaner directly on the glass or fixture as it could affect the metal finish. Ensure the light is switched off and take care not to pull the flex or allow water to come into contact with the electrical components. Regular dusting with a feather duster will also help keep the glass clean.<br><br>Metalwork:<br>We recommend a light polish with a non-abrasive lint free cloth. Do not use any metal cleaning products on the fixture as it can remove the finish entirely. Unlacquered brass finish will patinate slowly over time and can be brightened to brass by the use of a brass cleaning agent. |