HECTOR FINCH

PAOLA PENDANT VIOLA SMALL



PRODUCT CODE PL350VI SMALL

CATEGORY: CHANDELIERS & PENDANTS

DIMENSIONS

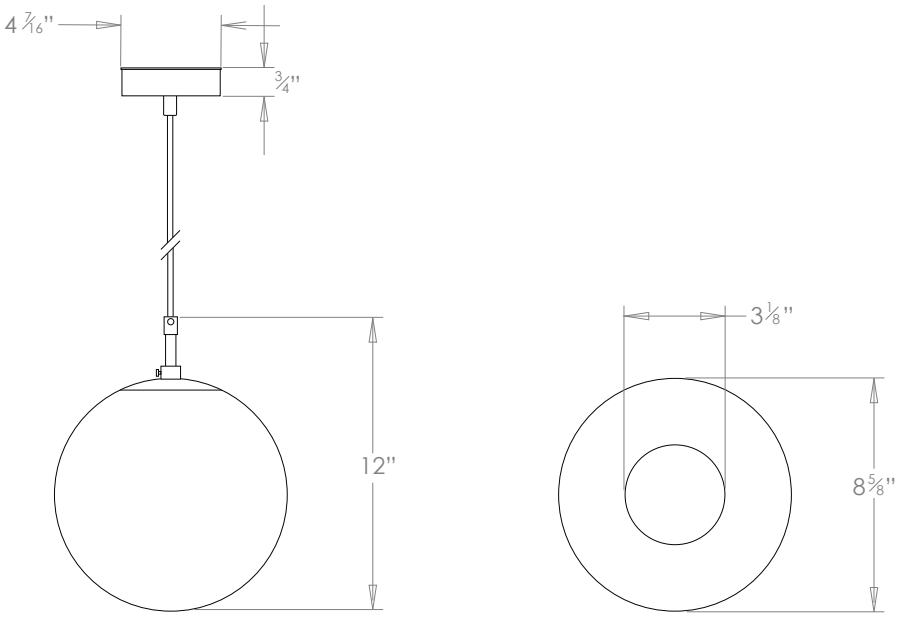

HECTOR FINCH

PRODUCT CODE PL350VI SMALL **CATEGORY: CHANDELIERS & PENDANTS**

PAOLA PENDANT VIOLA SMALL

LAMP TYPE INCANDESCENT	**USA** 1 x 60W (Max) E26 General Service
FINISH OPTIONS	Brass Polished Lacquered, Brass Polished Unlacquered, Antique Brass, Bronze (shown), Chrome, Nickel Polished and Nickel Matt.
SIZE & SIMILAR OPTIONS	Paola Wall Light (WL401) and Paola Pendant, Large (PL350L).
WEIGHT	10lb
ADDITIONAL INFORMATION	Supplied with 35" cable with cord grip lampholder and ceiling canopy. Minimum overall drop from the ceiling to the bottom of the globe 15".
CLEANING AND MAINTENANCE INSTRUCTIONS	Glass: Remove the glass where it is safe to do so. The glass then can be cleaned with a glass cleaner and a lint free cloth. Do not spray glass cleaner directly on the glass or fixture as it could affect the metal finish. Ensure the light is switched off and take care not to pull the flex or allow water to come into contact with the electrical components. Regular dusting with a feather duster will also help keep the glass clean. Metalwork: We recommend a light polish with a non-abrasive lint free cloth. Do not use any metal cleaning products on the fixture as it can remove the finish entirely. Unlacquered brass finish will patinate slowly over time and can be brightened to brass by the use of a brass cleaning agent.