HECTOR FINCH

GLOBE PRISM LIGHT LARGE

PRODUCT CODE PL73L

CATEGORY: CHANDELIERS & PENDANTS

DIMENSIONS

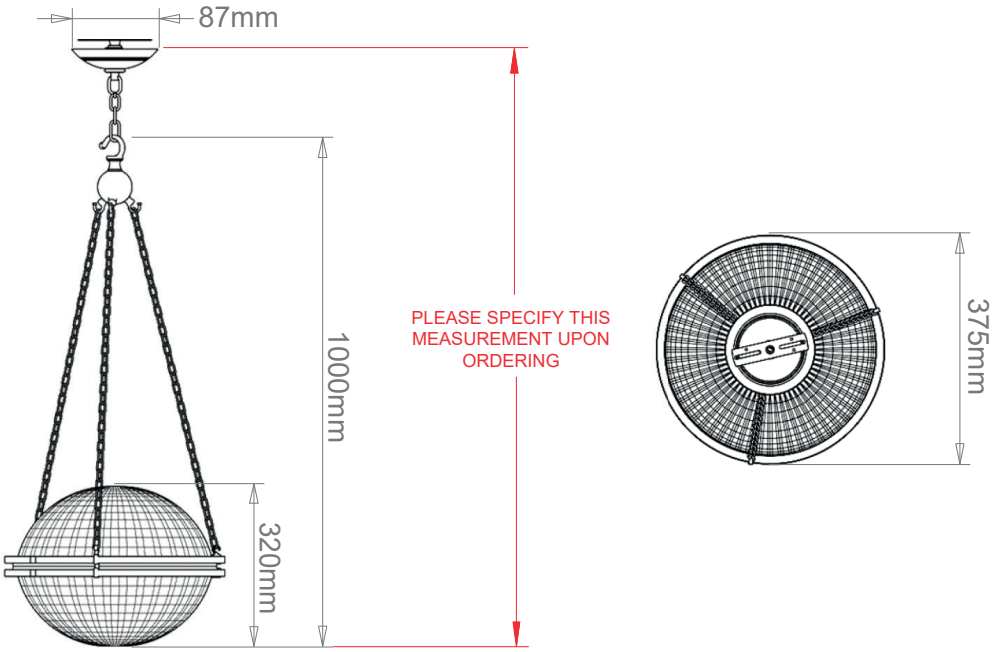

HECTOR FINCH

PRODUCT CODE PL73L

CATEGORY: CHANDELIERS & PENDANTS

GLOBE PRISM LIGHT LARGE

LAMP TYPE	**UK / EU** 2 x 40W (Max) E27 Golfball
FINISH OPTIONS	Brass Polished Lacquered, Brass Polished Unlacquered, Antique Brass, Bronze (shown), Chrome, Nickel Polished and Nickel Matte.
SIZE & SIMILAR OPTIONS	New York 2-Part Prism Light (PL32), New York Ceiling Light (CL06) and Feanor's Globe (PL106).
WEIGHT	9kg
ADDITIONAL INFORMATION	Please specify total drop from the ceiling to the bottom of the globe. Supplied with 2m of cable with cord grip lampholder and ceiling plate. Minimum overall drop from the ceiling to the bottom of the globe 850mm.
CLEANING AND MAINTENANCE INSTRUCTIONS	Glass: Remove the glass where it is safe to do so. The glass then can be cleaned with a glass cleaner and a lint free cloth. Do not spray glass cleaner directly on the glass or fixture as it could affect the metal finish. Ensure the light is switched off and take care not to pull the flex or allow water to come into contact with the electrical components. Regular dusting with a feather duster will also help keep the glass clean. Metalwork: We recommend a light polish with a non-abrasive lint free cloth. Do not use any metal cleaning products on the fixture as it can remove the finish entirely. Unlacquered brass finish will patinate slowly over time and can be brightened to brass by the use of a brass cleaning agent.