HECTOR FINCH

LIGHTING

ONOS 40M ADJUSTABLE PENDANT LAMP, CENTRE PULL

The Onos is ideal for over counters and islands in the kitchen and popular for use over breakfast tables. The shade may be adjusted for optimum lighting levels. Made in Germany with characteristic precision engineering, it is a beautiful solid brass fitting designed by a company whose roots stem from the Bauhaus.

PRODUCT CODE PL83M

CATEGORY: CHANDELIERS & PENDANTS

DIMENSIONS

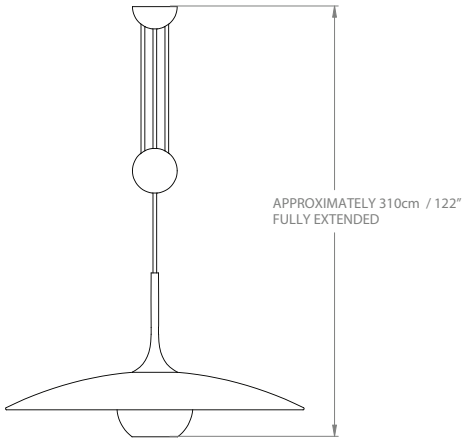

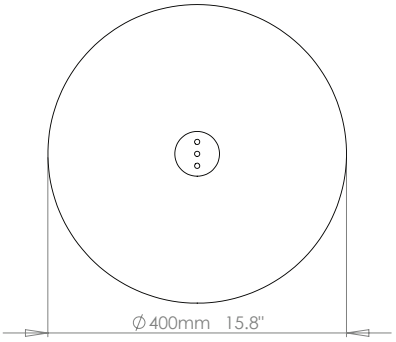

ONOS 40M ADJUSTABLE PENDANT LAMP, CENTRE PULL

LAMP TYPE INCANDESCENT	**UK** 1 x 60W (Max) E27 Standard	**EU** 1 x 60W (Max) E27 Standard	**USA** 1 x 60W (max) E26 General Service
LAMP TYPE ENERGY SAVING	Suitable CFL or LED equivalent.		
APPLICATION	**UK/EU** Suitable for indoor use only.		
FINISH OPTIONS	Nickel Matt, Nickel Polished (shown).		
SIZE & SIMILAR OPTIONS	Also available in Large (PL83L), Side Pull (PL95M), Double (PL93L) and Pendant (PL92L).		
ADDITIONAL INFORMAION	**USA** UL listed. 4” Junction box: Special j-box adapter available on request. Additional USA 120V conversion kit available on request.120V bulbs not included.		
PRODUCT WEIGHT	Pendant weight 6kg (13.2lbs) Minimum overall drop is 70cm (27.56”)		