HECTOR FINCH

HECTOR GLASS GLOBE MEDIUM

PRODUCT CODE PL85M

CATEGORY: CHANDELIERS & PENDANTS

DIMENSIONS

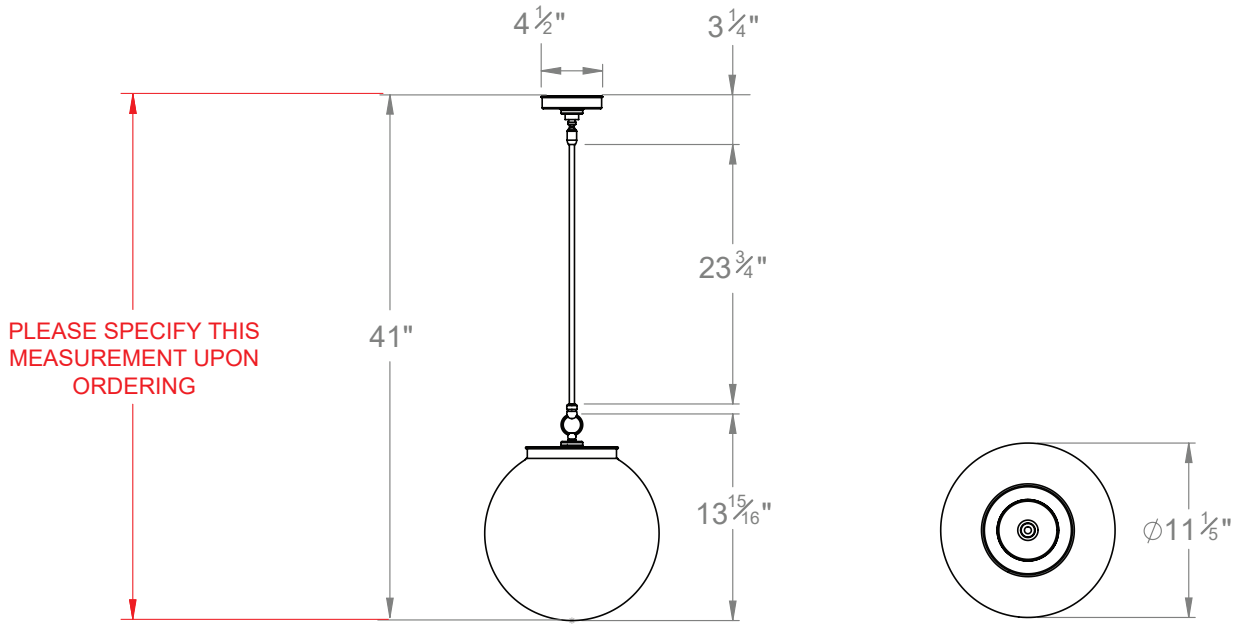

HECTOR FINCH

PRODUCT CODE PL85M **CATEGORY: CHANDELIERS & PENDANTS**

HECTOR GLASS GLOBE MEDIUM

LAMP TYPE	**USA** 1 x 60W (Max) E26 General Service
FINISH OPTIONS	Brass Polished Lacquered, Brass Polished Unlacquered, Antique Brass, Bronze (shown), Chrome, Nickel Polished and Nickel Matt.
SIZE & SIMILAR OPTIONS	Mini 5" (PL142/5"), Mini 8" (PL142/8"), Medium 3 WAY (PL85M3), Medium With Hood (PL85MHOOD), Large (PL85L), Extra Large (PL85XL) and Giant (PL85GT).
WEIGHT	6lb 8oz
ADDITIONAL INFORMATION	Please specify total drop from the ceiling to the bottom of the globe. Minimum overall drop from the ceiling to the bottom of the globe 17".
CLEANING AND MAINTENANCE INSTRUCTIONS	Glass: Remove the glass where it is safe to do so. The glass then can be cleaned with a glass cleaner and a lint free cloth. Do not spray glass cleaner directly on the glass or fixture as it could affect the metal finish. Ensure the light is switched off and take care not to pull the flex or allow water to come into contact with the electrical components. Regular dusting with a feather duster will also help keep the glass clean. Metalwork: We recommend a light polish with a non-abrasive lint free cloth. Do not use any metal cleaning products on the fixture as it can remove the finish entirely. Unlacquered brass finish will patinate slowly over time and can be brightened to brass by the use of a brass cleaning agent.