HECTOR FINCH

HECTOR MINI GLOBE WALL LIGHT SEEDED GLASS

PRODUCT CODE WL426 **CATEGORY: WALL LIGHTS**

DIMENSIONS

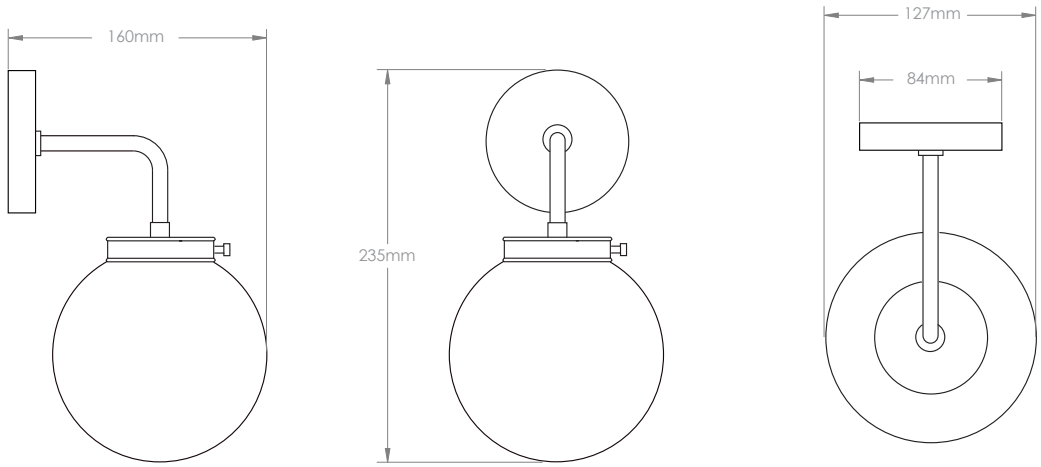

HECTOR FINCH

PRODUCT CODE WL426

CATEGORY: WALL LIGHTS

HECTOR MINI GLOBE WALL LIGHT SEEDED GLASS

LAMP TYPE	**UK / EU** 1 x Osh Lamp with 33W (Max) G9 halogen
FINISH OPTIONS	Brass Polished Lacquered (shown), Brass Polished Unlacquered, Antique Brass, Bronze, Chrome, Nickel Polished and Nickel Matte.
SIZE & SIMILAR OPTIONS	Hector Mini Globe Wall Light Clear Glass (WL424), Hector Mini Globe Wall Light Opal Glass (WL425), Hector Mini Globe Pendant Clear Glass (PL142), Hector Mini Globe Pendant Opal Glass (PL143).
WEIGHT	0.6kg
ADDITIONAL INFORMATION	Is supplied with IP44 Osh Lamp as standard for use in zone 2 within bathrooms.
CLEANING AND MAINTENANCE INSTRUCTIONS	Metalwork: We recommend a light polish with a non-abrasive lint free cloth. Do not use any metal cleaning products on the fixture as it can remove the finish entirely. Unlacquered brass finish will patinate slowly over time and can be brightened to brass by the use of a brass cleaning agent. Glass: Remove the glass where it is safe to do so. The glass then can be cleaned with a glass cleaner and a lint free cloth. Do not spray glass cleaner directly on the glass or fixture as it could affect the metal finish. Ensure the light is switched off and take care not to pull the flex or allow water to come into contact with the electrical components. Regular dusting with a feather duster will also help keep the glass clean.