HECTOR FINCH

STARBACK WALL LIGHT SINGLE ARM LARGE IP44

PRODUCT CODE WL76LIP44

CATEGORY: WALL LIGHTS

DIMENSIONS

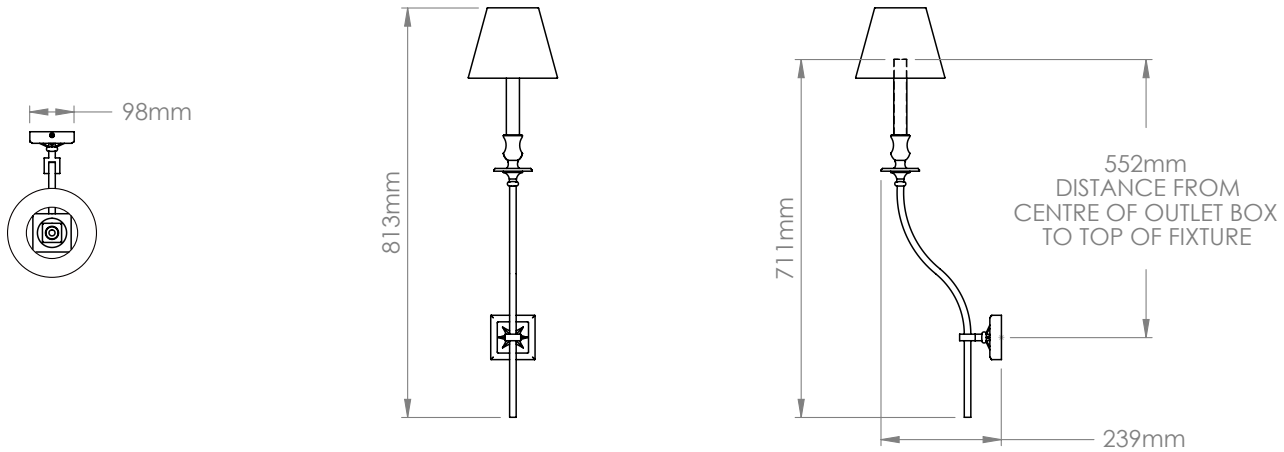

HECTOR FINCH

PRODUCT CODE WL76LIP44

CATEGORY: WALL LIGHTS

STARBACK WALL LIGHT SINGLE ARM LARGE IP44

LAMP TYPE	**UK / EU** 1 x Osh Lamp with 33W (Max) G9 halogen
SHADE OPTIONS	**UK / EU** Shade 1, Square (150mm base X 100mm top X 138mm height). Shade 5, Round (150mm base X 100mm top X 137.5mm height).
FINISH OPTIONS	Brass Polished Lacquered (shown), Brass Polished Unlacquered, Antique Brass, Bronze, Chrome, Nickel Polished and Nickel Matte.
SIZE & SIMILAR OPTIONS	Starback Wall Light Mini (WL83), Starback Wall Light Single Small (WL76S), Starback Wall Light Double (WL59) and Starback Wall Light Omega Arm (WL451).
WEIGHT	2kg
ADDITIONAL INFORMATION	Shade not included. Is supplied with IP44 Osh Lamp as standard for use in zone 2 within bathrooms.
CLEANING AND MAINTENANCE INSTRUCTIONS	Metalwork: We recommend a light polish with a non-abrasive lint free cloth. Do not use any metal cleaning products on the fixture as it can remove the finish entirely. Unlacquered brass finish will patinate slowly over time and can be brightened to brass by the use of a brass cleaning agent. Fabric Shades: Wipe gently with a dry cloth or dust lightly with a feather duster. Repeat regularly to prevent the build up of dust. Regular cleaning will prevent the possibility of dust becoming ingrained. Do not let water or moisture come into contact with the shade.