HECTOR FINCH

STARBACK WALL LIGHT SINGLE ARM SMALL IP44

PRODUCT CODE WL76SIP44

CATEGORY: WALL LIGHTS

DIMENSIONS

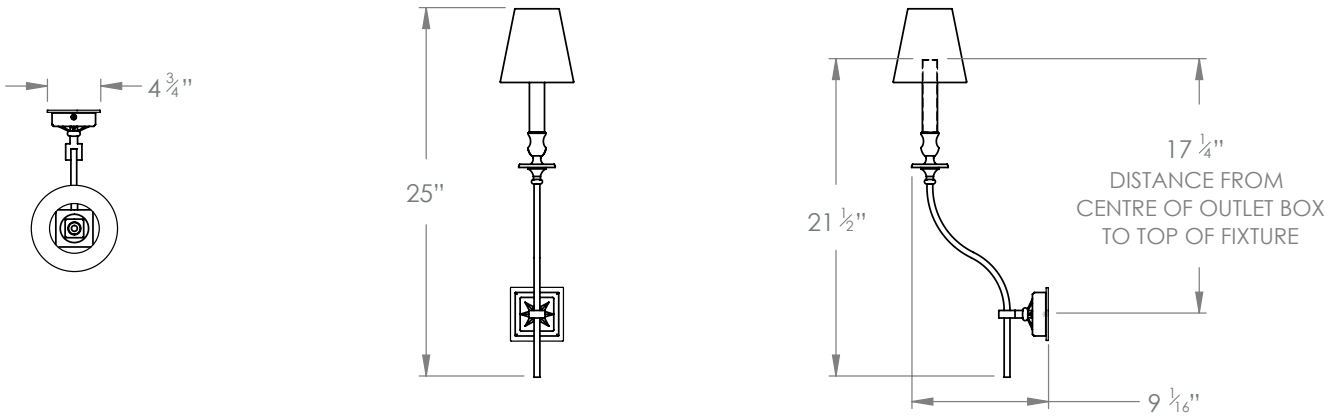

HECTOR FINCH

PRODUCT CODE WL76SIP44

CATEGORY: WALL LIGHTS

STARBACK WALL LIGHT SINGLE ARM SMALL IP44

LAMP TYPE	USA 1 x Osh Lamp with 33W (Max) G9 halogen
SHADE OPTIONS	USA Shade 3, Round (5" base X 3" top X 5" height). Shade 12, Square (5" base X 3" top X 5" height).
FINISH OPTIONS	Brass Polished Lacquered, Brass Polished Unlacquered, Antique Brass, Bronze (shown), Chrome, Nickel Polished and Nickel Matte.
SIZE & SIMILAR OPTIONS	Starback Wall Light Mini (WL83), Starback Wall Light Double (WL59), Starback Wall Light Single Large (WL76L) and Starback Wall Light Omega Arm (WL451).
WEIGHT	3lb 5oz
ACCREDITATION	This product is UL certificated.
MOUNTING	Our wall lights are designed to fit a standard US j-box with mounting holes 3 5/16" apart.
ADDITIONAL INFORMATION	Shade not included.
CLEANING AND MAINTENANCE INSTRUCTIONS	Metalwork: We recommend a light polish with a non-abrasive lint free cloth. Do not use any metal cleaning products on the fixture as it can remove the finish entirely. Unlacquered brass finish will patinate slowly over time and can be brightened to brass by the use of a brass cleaning agent. Fabric Shades: Wipe gently with a dry cloth or dust lightly with a feather duster. Repeat regularly to prevent the build up of dust. Regular cleaning will prevent the possibility of dust becoming ingrained. Do not let water or moisture come into contact with the shade.