Factory Porcelain Collections
Merchandising



anatolia

Index

Premiere Library Display	3
Premiere Library Display Boards	9
Porcelain Collection Catalog	12
A&D Binders	13
Sample Program	22
Sample Chip Carrying Case	32
Showroom Display Fixtures	33
Showroom Display Fixture Boards	35
Showroom Waterfall Display	37
Showroom Single Panel Display	44
Showroom Cubicle Display Panels	47
Sliding Panel Display	52
Rotating Tile Floor Display	59
Sample Tile Tower Display	62
Archive Bin Display	65

Available Factory Collections:
Majesto
Serena
Lithoform
Lustra
Monoforma
Architeq
Huxley*

*Huxley is not available in the Waterfall Display, Single Panel Display, and Rotating Tile Floor Display.

Premiere Ceramic + Porcelain, *Designer Library Display*

DISPLAY AT A GLANCE (HOLDS UP TO 156 BOARDS)

The Anatolia Designer Library Display features an exquisite, modern design to showcase Anatolia's exclusive collections. With its premium aesthetic, highlighted by LED lighting and a wood-look finish, the Designer Library Display effectively conveys essential product details across a wide range of collections.



Premiere Library Display Kit at a glance





Side angle view of display boards accentuates the beauty and impeccable quality of the designs.

Premiere Library Display Kit

Key specifications and item codes

ITEM DESCRIPTION	CONTENTS	ITEM CODE
ANATOLIA PREMIERE LIBRARY DISPLAY KIT	31 DISPLAY BOARD SETS AVAILABLE, 1 DISPLAY BASE, 78 DISPLAY BOARD ROLLER	9901-0084-0

Premiere Library Display	ITEM CODE
ANATOLIA LIBRARY DISPLAY BASE - 1 PC	9902-1923-0
ANATOLIA LIBRARY DISPLAY BOARD ROLLER - 78 PC	9902-1924-0

Capacity Overview

LEVEL	CAPACITY UP TO
Top	60 PC - 13” x 18” Boards
Middle	60 PC - 13” x 18” Boards or 48 PC - 25.5” x 26” Boards
Bottom	60 PC - 13” x 18” Boards or 48 PC - 25.5” x 26” Boards

Board sizes can be mixed for the middle and bottom levels. Please coordinate with your Business Development Manager.

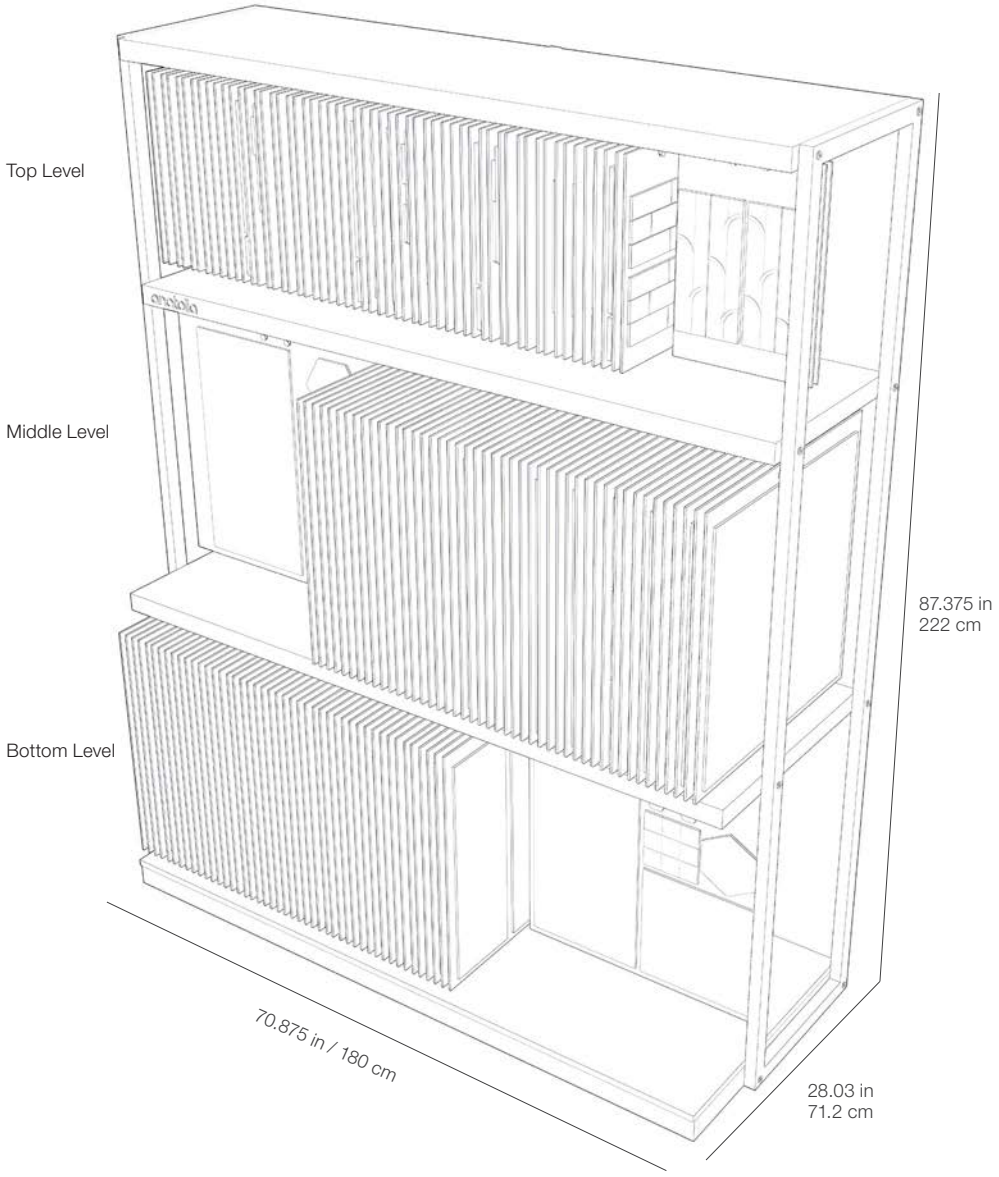

Premiere Library Display Kit

SET ITEM CODE	DESCRIPTION	CONTENTS	ITEM CODES
9902-1772-0	Anatolia 25.5 x 26 in Mjork / Tapestri Display Board Set (4 Boards)	Anatolia 25.5 x 26 in Tapestri Blend Display Board	9902-3158-0
		Anatolia 25.5 x 26 in Tapestri Display Board	9902-3159-0
		Anatolia 25.5 x 26 in Mjork Ash / Clay Display Board	9902-3160-0
		Anatolia 25.5 x 26 in Mjork Mica / Carbon Display Board	9902-3161-0
9902-2038-0	Anatolia 25.5 x 26 in Nord Display Board Set (4 Boards)	Anatolia 25.5 x 26 in Nord Lithium Display Board	9902-3162-0
		Anatolia 25.5 x 26 in Nord Palladium Display Board	9902-3163-0
		Anatolia 25.5 x 26 in Nord Chromium Display	9902-3164-0
		Anatolia 25.5 x 26 in Nord Carbon Display Board	9902-3165-0
9902-2039-0	Anatolia 25.5 x 26 in Raffino / Station Display Board Set (4 Boards)	Anatolia 25.5 x 26 in Raffino Bianco Vita / Statuario Valore Display Board	9902-3166-0
		Anatolia 25.5 x 26 in Raffino Calacatta Dolce / Onyx Suave Display Board	9902-3167-0
		Anatolia 25.5 x 26 in Station Ivory / Shadow Display Board	9902-3168-0
		Anatolia 25.5 x 26 in Station Pearl / Ash Display Board	9902-3169-0
9902-2041-0	Anatolia 25.5 x 26 in Form Display Board Set (4 Boards)	Anatolia 25.5 x 26 in Form Clover / Baroque / Northstar Display Board	9902-3170-0
		Anatolia 25.5 x 26 in Form Compass / Zenith / Diamond Display Board	9902-3171-0
		Anatolia 25.5 x 26 in Form Monochrome / Graphite / Ivory Display Board	9902-3172-0
		Anatolia 25.5 x 26 in Form Sand / Ice / Tide Display Board	9902-3173-0
9902-2042-0	Anatolia 25.5 x 26 in Industria Display Board Set (4 Boards)	Anatolia 25.5 x 26 in Industria Zinc / Graphite Display Board	9902-3174-0
		Anatolia 25.5 x 26 in Industria Lithium / Chromium Display Board	9902-3175-0
		Anatolia 25.5 x 26 in Industria Chromium Display Board	9902-3176-0
		Anatolia 25.5 x 26 in Industria Graphite Display Board	9902-3177-0
9902-2043-0	Anatolia 25.5 x 26 in Ceraforge / Belgian Linen Display Board Set (4 Boards)	Anatolia 25.5 x 26 in Ceraforge Lithium / Iron Display Board	9902-3178-0
		Anatolia 25.5 x 26 in Ceraforge Chromium / Titanium Display Board	9902-3179-0
		Anatolia 25.5 x 26 in Ceraforge Oxide Display Board	9902-3180-0
		Anatolia 25.5 x 26 in Belgian Linen Display Board	9902-3181-0

SET ITEM CODE	DESCRIPTION	CONTENTS	ITEM CODES
9902-2044-0	Anatolia 25.5 x 26 in Aspen Display Board Set (2 Boards)	Anatolia 25.5 x 26 in Aspen Paper Birch / French Oak / Beachcomber Display Board	9902-3182-0
		Anatolia 25.5 x 26 in Aspen Ash / Grey Ridge / Sequoia Display Board	9902-3183-0
9902-2045-0	Anatolia 25.5 x 26 in La Marca Display Board Set 1 (4 Boards)	Anatolia 25.5 x 26 in La Marca Travertino Instrata / Calacatta Paonazzo Display Board	9902-3184-0
		Anatolia 25.5 x 26 in La Marca Arabescato / Paradiso Argento Display Board	9902-3185-0
		Anatolia 25.5 x 26 in La Marca Nero Venato / Onyx Nuvolato Display Board	9902-3186-0
		Anatolia 25.5 x 26 in La Marca Statuarietto / Carrara Gioia Display Board	9902-3187-0
9902-2046-0	Anatolia 25.5 x 26 in La Marca Display Board Set 2 (3 Boards)	Anatolia 25.5 x 26 in La Marca 24 x 24 in La Marca Statuario Nuovo Honed Display Board	9902-3188-0
		Anatolia 25.5 x 26 in La Marca Picco Display Board	9902-3189-0
		Anatolia 25.5 x 26 in La Marca Modella Display Board	9902-3190-0
9902-2047-0	Anatolia 25.5 x 26 in Soho Display Board Set (3 Boards)	Anatolia 25.5 x 26 in Soho 2 x 12 in Field Tile Display Board	9902-3191-0
		Anatolia 25.5 x 26 in Soho Mixed Size Field Tile Display Board	9902-3192-0
		Anatolia 25.5 x 26 in Soho 8 x 24 in Field Tile Display Board	9902-3193-0
9902-2040-0	Anatolia 13 x 18 in Soho / Raffino Display Board Set (6 Boards)	Anatolia 13 x 18 in Soho Scallop / Arabesque Display Board	9902-3194-0
		Anatolia 25.5 x 26 in Soho Herringbone Display Board	9902-3195-0
		Anatolia 13 x 18 in Soho Picket Display Board	9902-3196-0
		Anatolia 13 x 18 in Soho Brick Display Board	9902-3197-0
		Anatolia 13 x 18 in Raffino Bianco Vita / Statuario Valore Display Board	9902-3198-0
		Anatolia 13 x 18 in Raffino Calacatta / Onyx Display Board	9902-3199-0
9902-2048-0	Anatolia 13 x 18 in Soho Display Board Set (6 Boards)	Anatolia 13 x 18 in Soho Cubic Display Board	9902-3200-0
		Anatolia 13 x 18 in Soho 2x2 in / 2 in Hex Display Board	9902-3201-0
		Anatolia 13 x 18 in Soho 1 in Hex / Basketweave Display Board	9902-3202-0
		Anatolia 13 x 18 in Soho Hex / Diamond Display Board	9902-3203-0
		Anatolia 13 x 18 in Soho Penny Round Display Board	9902-3204-0
		Anatolia 13 x 18 in Soho Plaid / Chain Display Board	9902-3205-0

NOTE: Individual replacement boards are orderable on the customer portal.

Premiere Library Display Kit

SET ITEM CODE	DESCRIPTION	CONTENTS	ITEM CODES
9902-2049-0	Anatolia 13 x 18 in Geometra Display Board Set (6 Boards)	Anatolia 13 x 18 in Geometra Ivy Powder / Silver Display Board	9902-3206-0
		Anatolia 13 x 18 in Geometra Ivy Stone / Charcoal Display Board	9902-3207-0
		Anatolia 13 x 18 in Geometra Ivy Emerald / Ink Display Board	9902-3208-0
		Anatolia 13 x 18 in Geometra Maze Powder / Divide Silver Display Board	9902-3209-0
		Anatolia 13 x 18 in Geometra Maze Stone / Divide Charcoal Display Board	9902-3210-0
		Anatolia 13 x 18 in Geometra Divide Ink / Maze Emerald Display Board	9902-3211-0
9902-3332-0	Anatolia 13 x 18 in Obsidian Display Board Set (2 Boards)	Anatolia 13 x 18 in Obsidian Antique Bronze Display Board	9902-3212-0
		Anatolia 13 x 18 in Obsidian Antique Silver Display Board	9902-3213-0
9902-2050-0	Anatolia 13 x 18 in Teramoda Display Board Set 1 (5 Boards)	Anatolia 13 x 18 in Teramoda Powder Display Board	9902-3214-0
		Anatolia 13 x 18 in Teramoda Silver Display Board	9902-3215-0
		Anatolia Teramoda 13 x 18 in Stone Display Board	9902-3216-0
		Anatolia 13 x 18 in Teramoda Emerald Display Board	9902-3217-0
		Anatolia 13 x 18 in Teramoda Sterling Display Board	9902-3218-0
9902-2051-0	Anatolia 13 x 18 in Teramoda Display Board Set 2 (5 Boards)	Anatolia 13 x 18 in Teramoda Charcoal Display Board	9902-3219-0
		Anatolia 13x 18 in Teramoda Bamboo Display Board	9902-3220-0
		Anatolia 13 x 18 in Teramoda Sky Display Board	9902-3221-0
		Anatolia 13 x 18 in Teramoda Petal Display Board	9902-3222-0
		Anatolia 13 x 18 in Teramoda Ink Display Board	9902-3223-0
9902-2052-0	Anatolia 13 x 18 in Marlow Display Board Set (6 Boards)	Anatolia 13 x 18 in Marlow Cloud Display Board	9902-3224-0
		Anatolia 13 x 18 in Marlow Mist Display Board	9902-3225-0
		Anatolia 13x 18 in Marlow Smoke Display Board	9902-3226-0
		Anatolia 13x 18 in Marlow Desert Display Board	9902-3227-0
		Anatolia 13 x 18 in Marlow Earth Display Board	9902-3228-0
		Anatolia 13 x 18 in Marlow Tide Display Board	9902-3229-0

SET ITEM CODE	DESCRIPTION	CONTENTS	ITEM CODES
9902-2053-0	Anatolia 13 x 18 in Element Display Board Set (5 Boards)	Anatolia 13 x 18 in Element Mixed Display Board	9902-3230-0
		Anatolia 13 x 18 in Element Chevron / Arabesque Display Board	9902-3231-0
		Anatolia 13 x 18 in Element Brick / Penny Round Display Board	9902-3232-0
		Anatolia 13 x 18 in Element Stacked / Random Strip Display Board	9902-3233-0
		Anatolia 13x 18 in Element Scallop / Petal Display Board	9902-3234-0
9902-2999-0	Anatolia 25.5 x 26 in Majesto Display Board Set 1 (4 Boards)	Anatolia 25.5 x 26 in Bianco Dior Display Board	9902-3300-0
		Anatolia 25.5 x 26 in Gemma Bronze Display Board	9902-3323-0
		Anatolia 25.5 x 26 in Macchia Vecchia Display Board	9902-3299-0
		Anatolia 25.5 x 26 in Oro Noir Display Board	9902-3322-0
9902-3000-0	Anatolia 25.5 x 26 in Majesto Display Board Set 2 (4 Boards)	Anatolia 25.5 x 26 in Atlantic Ocean Board	9902-3298-0
		Anatolia 25.5 x 26 in Foresta Display Board	9902-3321-0
		Anatolia 25.5 x 26 in Sahara Noir Display Board	9902-3297-0
		Anatolia 25.5 x 26 in Verdi Alpi Display Board	9902-3320-0
9902-3001-0	Anatolia 25.5 x 26 in Majesto Display Board Set 3 (4 Boards)	Anatolia 25.5 x 26 in Bianco Gioia Display Board	9902-3296-0
		Anatolia 25.5 x 26 in Calacatta Borghini Display Board	9902-3314-0
		Anatolia 25.5 x 26 in Calacatta Noir Display Board	9902-3290-0
		Anatolia 25.5 x 26 in Calacatta Oro Display Board	9902-3310-0
9902-3002-0	Anatolia 25.5 x 26 in Majesto Display Board Set 4 (4 Boards)	Anatolia 25.5 x 26 in Forge Eleganza Display Board	9902-3286-0
		Anatolia 25.5 x 26 in French Vanilla Display Board	9902-3306-0
		Anatolia 25.5 x 26 in Statuario Display Board	9902-3282-0
		Anatolia 25.5 x 26 in Pietra Imperiale Display Board	9902-3292-0
9902-3010-0	Anatolia 25.5 x 26 in Majesto Display Board Set 6 (3 Boards)	Anatolia 25.5 x 26 in Travertino Classico Display Board	9902-3289-0
		Anatolia 25.5 x 26 in Travertino Titanium Display Board	9902-3309-0
		Anatolia 25.5 x 26 in Ceppo di Gre Display Board	9902-3285-0

NOTE: Individual replacement boards are orderable on the customer portal.

Premiere Library Display Kit

SET ITEM CODE	DESCRIPTION	CONTENTS	ITEM CODES
9902-3003-0	Anatolia 25.5 x 26 in Majesto Display Board Set 5 (4 Boards)	Anatolia 25.5 x 26 in Ariel Bianco Display Board	9902-3279-0
		Anatolia 25.5 x 26 in Bianco Stratura Display Board	9902-3301-0
		Anatolia 25.5 x 26 in Calacatta Corchia Display Board	9902-3277-0
		Anatolia 25.5 x 26 in Calacatta Cremo Display Board	9902-3316-0
9902-3009-0	Anatolia 25.5 x 26 in Majesto Display Board Set 7 (3 Boards)	Anatolia 25.5 x 26 in Arabescato Corchia Display Board	9902-3303-0
		Anatolia 25.5 x 26 in Crystal Bianco Display Board	9902-3295-0
		Anatolia 25.5 x 26 in Taj Mahal Display Board	9902-3317-0
9902-3005-0	Anatolia 25.5 x 26 in Lithoform Veincut Display Board Set (4 Boards)	Anatolia 25.5 x 26 in Lithoform Veincut Dunes Display Board	9902-3284-0
		Anatolia 25.5 x 26 in Lithoform Veincut Coast Display Board	9902-3305-0
		Anatolia 25.5 x 26 in Lithoform Veincut Vista Display Board	9902-3281-0
		Anatolia 25.5 x 26 in Lithoform Veincut Twilight Display Board	9902-3302-0
9902-3006-0	Anatolia 25.5 x 26 in Lithoform Crosscut Display Board Set (4 Boards)	Anatolia 25.5 x 26 in Lithoform Crosscut Dunes Display Board	9902-3278-0
		Anatolia 25.5 x 26 in Lithoform Crosscut Coast Display Board	9902-3318-0
		Anatolia 25.5 x 26 in Lithoform Crosscut Vista Display Board	9902-3294-0
		Anatolia 25.5 x 26 in Lithoform Crosscut Twilight Display Board	9902-3315-0
9902-3008-0	Anatolia 25.5 x 26 in Monoforma Display Board Set (4 Boards)	Anatolia 25.5 x 26 in Monoforma Moonlight Display Board	9902-3283-0
		Anatolia 25.5 x 26 in Monoforma Oasis Display Board	9902-3304-0
		Anatolia 25.5 x 26 in Monoforma Storm Display Board	9902-3280-0
		Anatolia 25.5 x 26 in Monoforma Silhouette Display Board	9902-3319-0
9902-3004-0	Anatolia 25.5 x 26 in Lustra Display Board Set (4 Boards)	Anatolia 25.5 x 26 in Lustra Onyx Feather Display Board	9902-3337-0
		Anatolia 25.5 x 26 in Lustra Onyx Crema Display Board	9902-3312-0
		Anatolia 25.5 x 26 in Lustra Onyx Sage Display Board	9902-3288-0
		Anatolia 25.5 x 26 in Lustra Onyx Hazel Display Board	9902-3308-0

SET ITEM CODE	DESCRIPTION	CONTENTS	ITEM CODES
9902-3007-0	Anatolia 25.5 x 26 in Serena Display Board Set 1 (3 Boards)	Anatolia 25.5 x 26 in Serena Flint Display Board	9902-3291-0
		Anatolia 25.5 x 26 in Serena Crater Display Board	9902-3311-0
		Anatolia 25.5 x 26 in Serena Shale Display Board	9902-3287-0
9902-3334-0	Anatolia 25.5 x 26 in Serena Display Board Set 2 (3 Boards)	Anatolia 25.5 x 26 in Serena Dusk Display Board	9902-3293-0
		Anatolia 25.5 x 26 in Serena Valley Display Board	9902-3313-0
		Anatolia 25.5 x 26 in Serena Pewter Display Board	9902-3307-0
9902-3676-0	Anatolia 25.5 x 26 in Architeq Micro Display Board Set 1 (4 Boards)	Anatolia 25.5 x 26 in Architeq Micro Smoke Display Board	9902-3538-0
		Anatolia 25.5 x 26 in Architeq Micro Mist Display Board	9902-3537-0
		Anatolia 25.5 x 26 in Architeq Micro Bone Display Board	9902-3536-0
		Anatolia 25.5 x 26 in Architeq Micro Sand Display Board	9902-3535-0
9902-3677-0	Anatolia 25.5 x 26 in Architeq Micro Display Board Set 2 (3 Boards)	Anatolia 25.5 x 26 in Architeq Micro Clay Display Board	9902-3534-0
		Anatolia 25.5 x 26 in Architeq Micro Earth Display Board	9902-3533-0
		Anatolia 25.5 x 26 in Architeq Micro Graphite Display Board	9902-3532-0
9902-3678-0	Anatolia 25.5 x 26 in Architeq Micro Display Board Set 3 (3 Boards)	Anatolia 25.5 x 26 in Architeq Micro Cocoa Display Board	9902-3531-0
		Anatolia 25.5 x 26 in Architeq Micro Moss Display Board	9902-3530-0
		Anatolia 25.5 x 26 in Architeq Micro Storm Display Board	9902-3529-0
9902-3721-0	Anatolia 25.5 x 26 in Huxley Display Board Set (4Boards)	Anatolia 25.5 x 26 in Huxley Weathered Oak / Sand Elm Display Board	9902-3710-0
		Anatolia 25.5 x 26 in Huxley Honey Oak / Smoked Walnut Display Board	9902-3709-0
		Anatolia 25.5 x 26 in Huxley Bleached Maple / Golden Birch Display Board	9902-3708-0
		Anatolia 25.5 x 26 in Majesto Tuscano Burgundy Display Board	9902-3712-0

NOTE: Individual replacement boards are orderable on the customer portal.

Premiere Ceramic + Porcelain Designer Library, *Display Boards at a Glance*

Anatolia has designed a premium, compact and efficient display board that allows for it to be easily picked up and moved around for design discussions with clients. The front of the board displays a variety of formats.

The back of the board features elegant and refined rooms scenes specific to each collection. Technical specifications include sizes, finishes available, and usage recommendations.



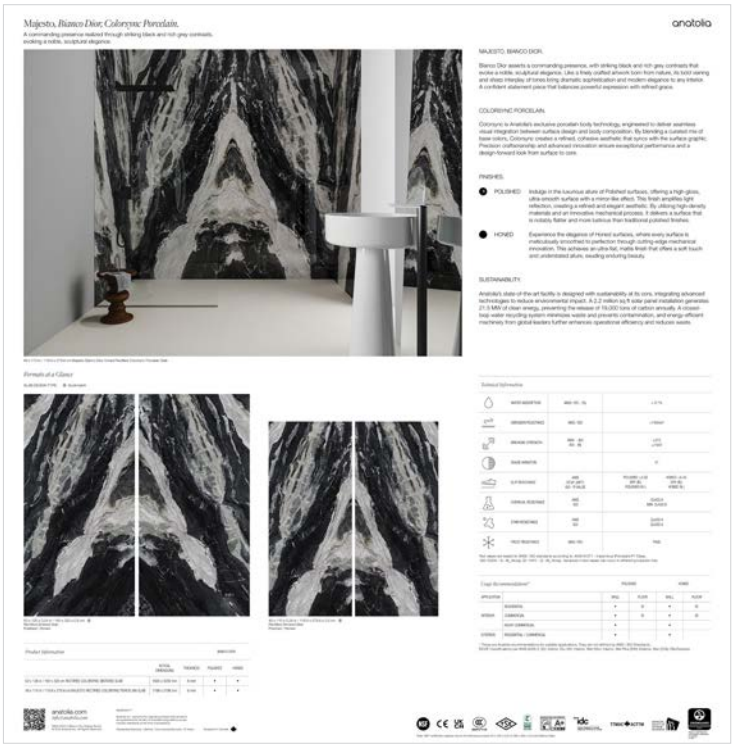

25.5 x 26 in / 65 x 67.3 cm Majesto Bianco Dior Display Board



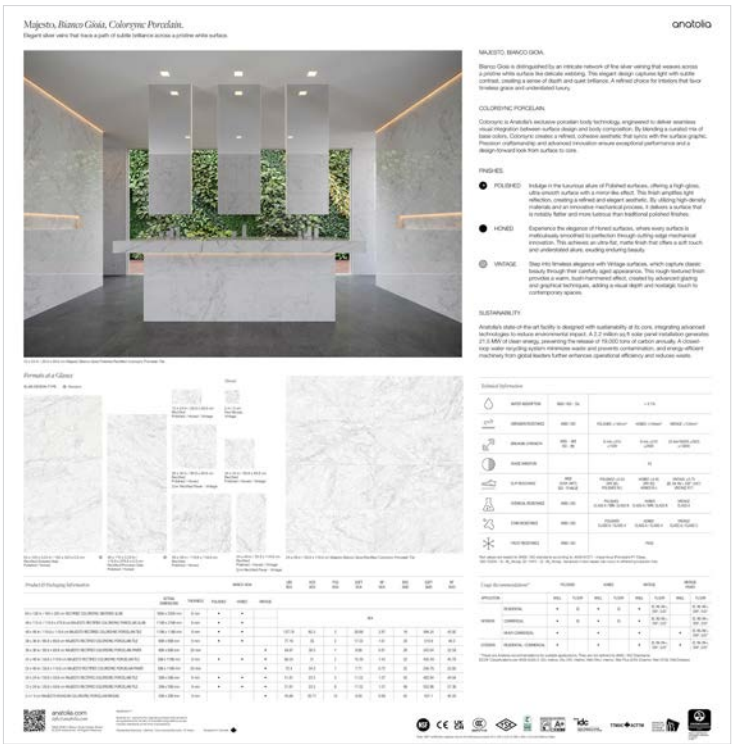

25.5 x 26 in / 65 x 67.3 cm Majesto Bianco Gioia Display Board

Display Boards at a Glance



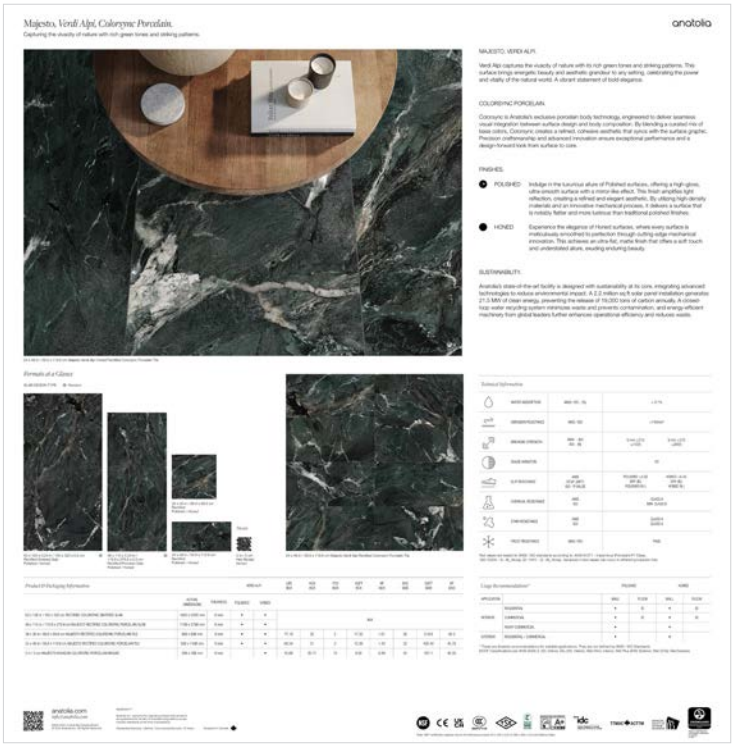

25.5 x 26 in / 65 x 67.3 cm Majesto Verdi Alpi Display Board



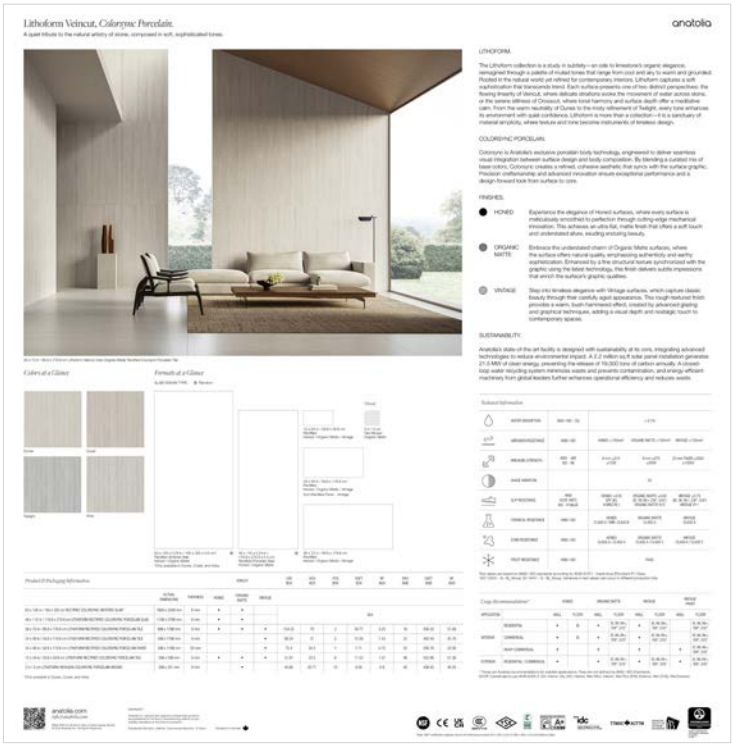

25.5 x 26 in / 65 x 67.3 cm Lithoform Veincut Vista Display Board

Display Boards at a Glance



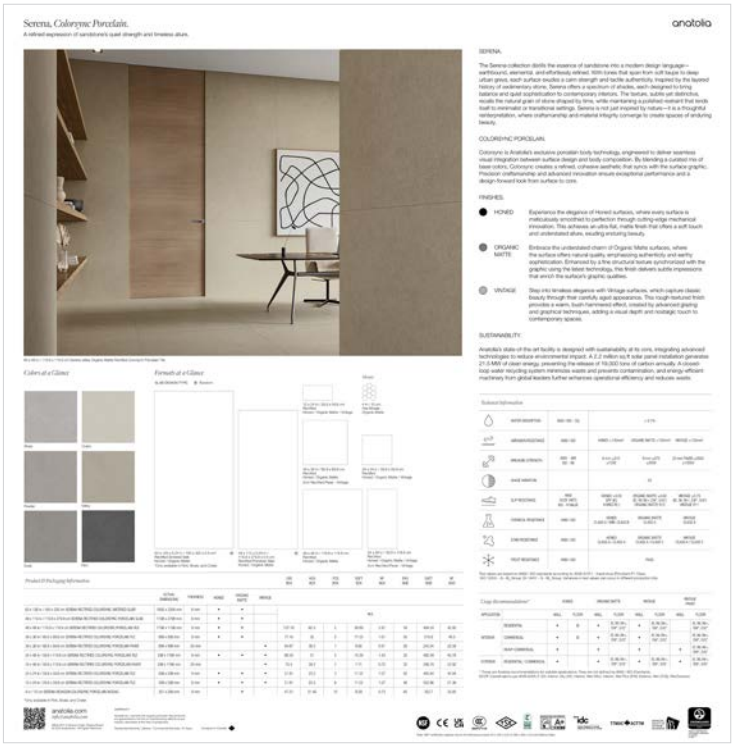

25.5 x 26 in / 65 x 67.3 cm Serena Crater Display Board





25.5 x 26 in / 65 x 67.3 cm Monoforma Silhouette Display Board

Porcelain Collection Catalog

INTERNATIONAL VERSION

The Anatolia catalog is an essential merchandising tool, an inspiring, intuitive guide to our collections. Immerse yourself in a curated journey, shaped by craftsmanship and designed to spark creativity. Each colour, finish, and design invites you to explore, create and discover new possibilities. Thoughtfully organized and artfully crafted, the catalog combines striking photography with clear product details to support confident decision-making in showrooms, design libraries, and client presentations. With its refined layout and durable hard cover, the Anatolia catalog delivers both elegance and efficiency, elevating every step of the design experience.





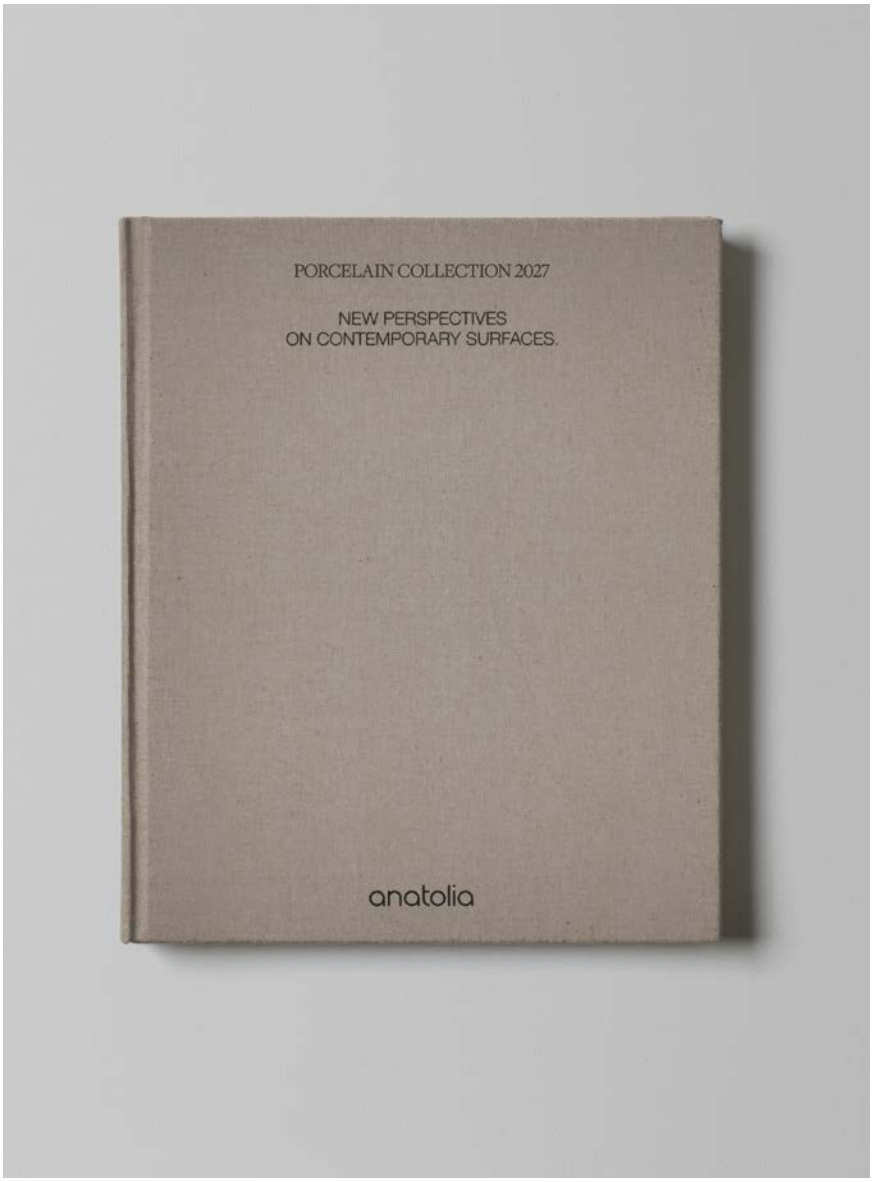

ITEM DESCRIPTION	ITEM CODE	UPC
Anatolia Colorsync and Unglazed Porcelain 2027 Catalog	9902-3734-0	828492118122

Ceramic + Porcelain Catalog

NORTH AMERICAN VERSION

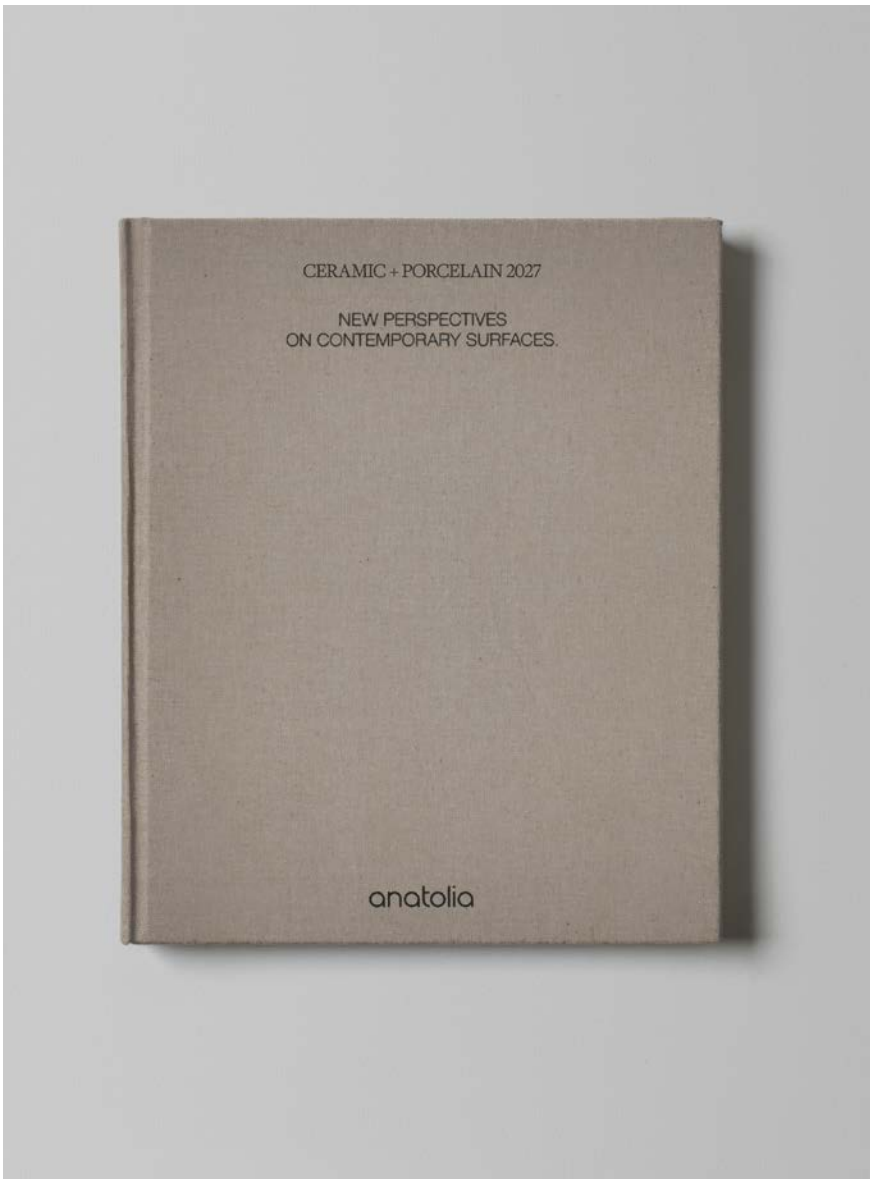





ITEM DESCRIPTION	ITEM CODE	UPC
Anatolia Ceramic + Porcelain Catalog 2027	9902-3735-0	828492118139

Majesto A&D Binder

In today's fast-paced A&D community and dealer network, space within design libraries and showrooms is often limited. To address this challenge, we have crafted an elegant and highly efficient solution: Anatolia's A&D binders. Each binder is thoughtfully designed to provide both functionality and sophistication. The front cover introduces the collection with key information and a stunning interior scene. Upon opening, the binder reveals up to 12 sample chips, showcasing the breath of Anatolia's exquisite collection. The sample chips have been carefully designed and cut to be truly representative of the color, vein, and graphical experience. Each binder highlights a curated selection. Designed with precision, the binder features a spine that clearly identifies the collection name and material type, allowing for easy access and organization. This binder is an essential tool that merges convenience with luxury, elevating your design experience.



A&D Binder Outside



A&D Binder Inside

A&D Binder Sets	ITEM DESCRIPTION	ITEM CODE	UPC
	Majesto A&D Binders		
A&D Binder for Colors Statuario, Bianco Gioia, Arabescato Corchia, Calacatta Corchia, Ariel Bianco	BINDER 1	9902-2552-0	828492089989
A&D Binder for Colors Calacatta Borghini, Calacatta Oro, Bianco Stratura, Calacatta Cremo	BINDER 2	9902-2553-0	828492089996
A&D Binder for Colors Travertino Titanium, Travertino Classico, Ceppo di Gre	BINDER 3	9902-2554-0	828492090008
A&D Binder for Colors Crystal Bianco, Atlantic Ocean, Gemma Bronze, Macchia Vecchia, Verdi Alpi, Bianco Dior	BINDER 4	9902-2555-0	828492090015
A&D Binder for Colors Calacatta Noir, Forge Eleganza, Sahara Noir, Oro Noir, Tuscano Burgundy	BINDER 5	9902-2556-0	828492090022
A&D Binder for Colors French Vanilla, Pietra Imperiale, Taj Mahal, Foresta	BINDER 6	9902-3012-0	828492090657

A&D Binder at a Glance

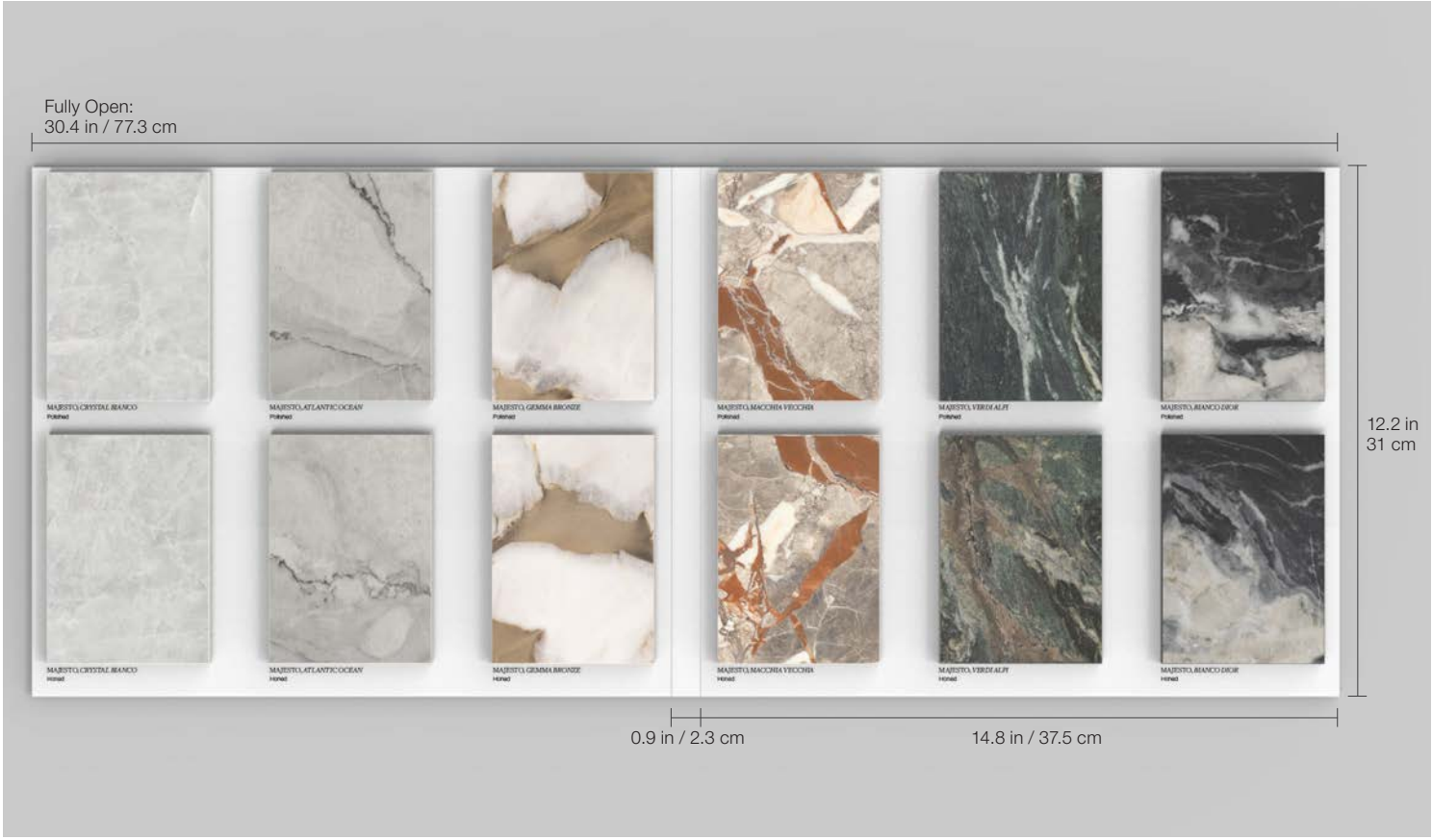

Lithoform A&D Binder



A&D Binder Outside



A&D Binder Inside

A&D Binder Sets	ITEM DESCRIPTION	ITEM CODE	UPC
	Lithoform A&D Binders		
A&D Binder for Crosscut Colors Dunes, Coast, Twilight, Vista	BINDER 1	9902-2560-0	828492090060
A&D Binder for Veincut Colors Dunes, Coast, Twilight, Vista	BINDER 2	9902-2561-0	828492090077

Serena A&D Binder



A&D Binder Outside



A&D Binder Inside

A&D Binder Sets	ITEM DESCRIPTION	ITEM CODE	UPC
	Serena A&D Binders		
A&D Binder for Colors Shale, Crater, Valley	BINDER 1	9902-2558-0	828492090046
A&D Binder for Colors Pewter, Dusk, Flint	BINDER 2	9902-2559-0	828492090053

Monoforma A&D Binder



A&D Binder Outside



A&D Binder Inside

A&D Binder Sets	ITEM DESCRIPTION	ITEM CODE	UPC
	Monoforma A&D Binder		
A&D Binder for Colors Moonlight, Oasis, Storm, Silhouette	BINDER 1	9902-2562-0	828492090084

Lustra A&D Binder



A&D Binder Outside



A&D Binder Inside

A&D Binder Sets	ITEM DESCRIPTION	ITEM CODE	UPC
	Lustra A&D Binder		
A&D Binder for Colors Onyx Crema, Onyx Feather, Onyx Halo, Onyx Sage	BINDER 1	9902-2557-0	828492090039

Architeq Micro A&D Binder



A&D Binder Outside



A&D Binder Inside

A&D Binder Sets	ITEM DESCRIPTION	ITEM CODE	UPC
	Architeq Micro A&D Binders		
A&D Binder for Colors Bone, Sand, Clay, Earth, Cocoa	BINDER 1	9902-3540-0	828492111772
A&D Binder for Colors Mist, Storm, Moss, Smoke, Graphite	BINDER 2	9902-3539-0	828492111789

Huxley A&D Binder



A&D Binder Outside

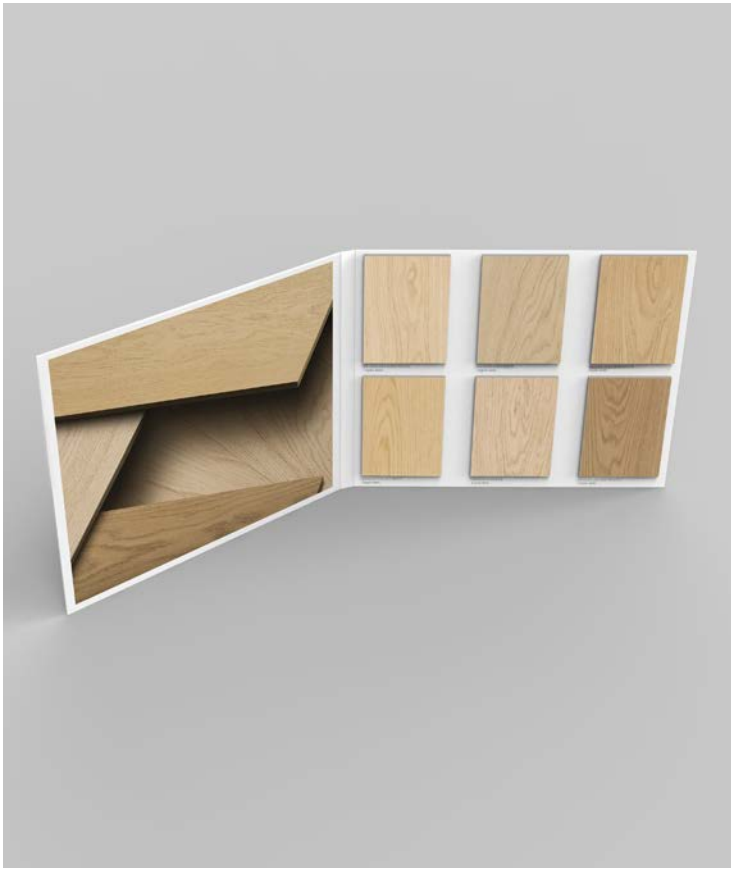

A&D Binder Inside

A&D Binder Sets	ITEM DESCRIPTION	ITEM CODE	UPC
	Huxley A&D Binders		
A&D Binder for Colors Bleached Maple, Golden Birch, Honey Oak, Sand Elm, Weathered Oak, Smoked Walnut	BINDER 1	9902-3711-0	828492117736

Sintered Slab A&D Binder



A&D Binder Outside

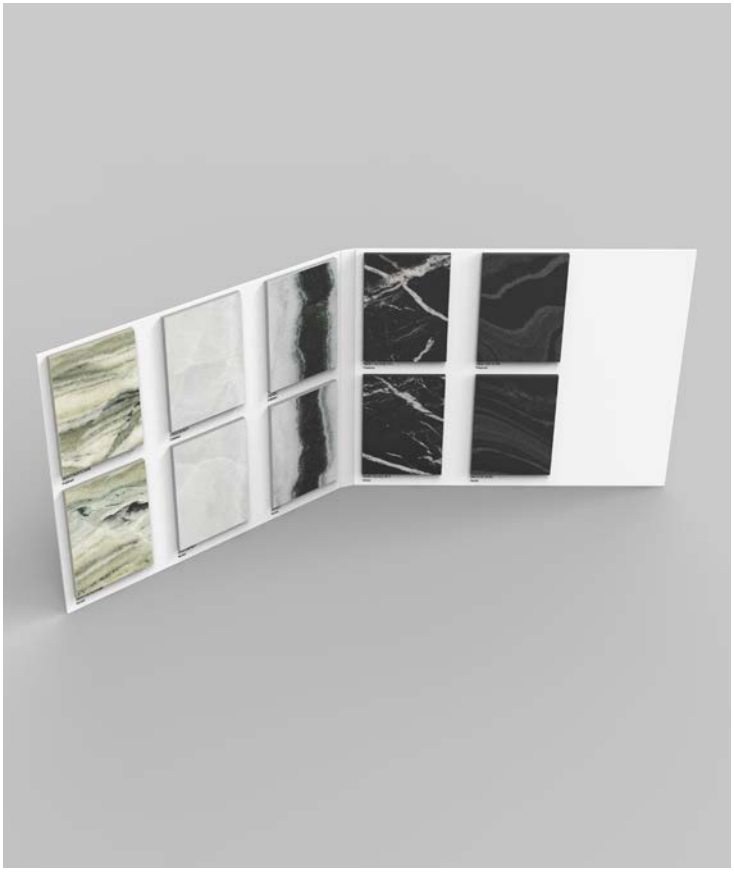

A&D Binder Inside

A&D Binder Sets	ITEM CODE	UPC
Anatolia A&D Binder 1 - for colors Arabescato Vagli, Colorado Lincoln, Fusion White, Calacatta Carrara, Super White	9902-3328-0	828492097137
Anatolia A&D Binder 2 - for colors Calacatta Viola, Calacatta Picasso, Cristallo, Montagna Grey, Marina White, Grigio Quarzo	9902-3329-0	828492097144
Anatolia A&D Binder 3 - for colors Montagna Jade, Onyx Halo, Panda, Nero Marquina, Armani Noir	9902-3330-0	828492097151
Anatolia Publica A&D Binder - for colors Horizon, Terrain, Thunder	9902-3331-0	828492097168

Sintered Slab A&D Binder

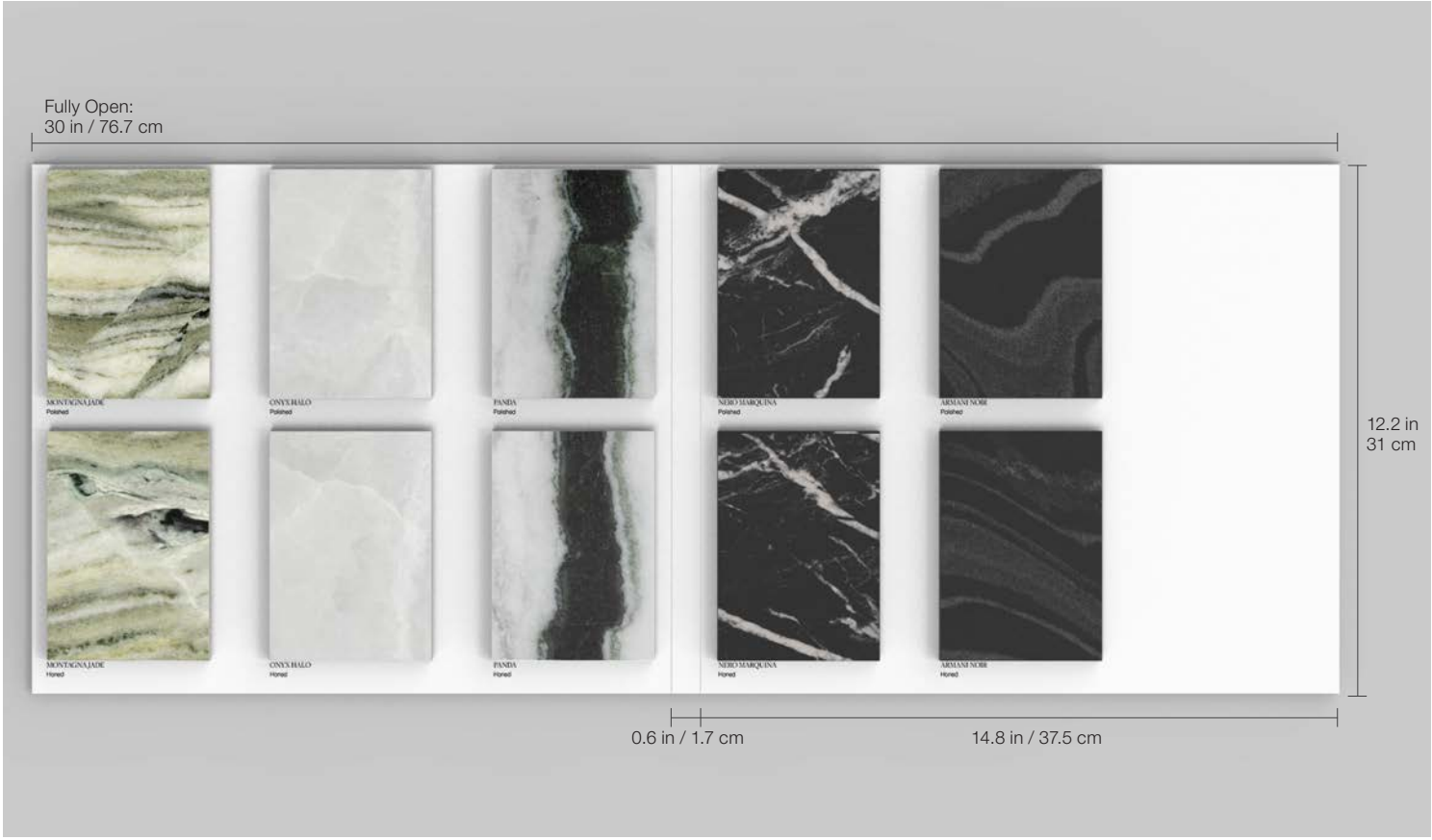

Majesto Sample Chip Program

SIZES AT A GLANCE
4 x 5 in / 9.5 x 13.4 cm

Sample chips are an essential tool for bringing mood boards to life and creating a cohesive design vision. The compact 4 x 5 in / 9.5 x 13.4 cm sample chip is thoughtfully designed for portability and precision, making it ideal for quick comparisons and seamless integration into design presentations. This versatile chip is also featured in the A&D Binder and Sample Chip Carrying Case.

Anatolia has created a sample chip program featuring every color and finish combination that includes key information for that color on its back label. The sample chips have been carefully designed and cut to be truly representative of the color, vein, and graphical experience. Anatolia also developed a premium Sample Chip Carrying Case to easily and beautifully store, organize, present, and carry sample chips to meetings.



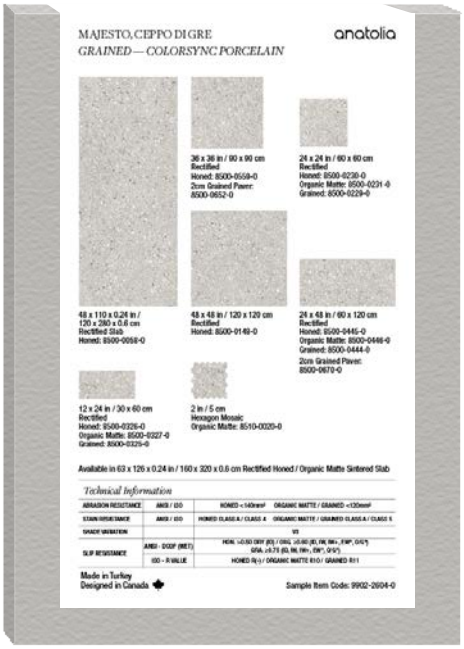

Sample Chip Size: 4 x 5 in / 9.5 x 13.4 cm

Sample Chips	ITEM CODE	UPC
Anatolia Arabescato Corchia Honed Sample Chip, 9mm	9902-2568-0	828492090961
Anatolia Arabescato Corchia Polished Sample Chip, 9mm	9902-2569-0	828492090978
Anatolia Ariel Bianco Honed Sample Chip, 9mm	9902-2572-0	828492091005
Anatolia Ariel Bianco Polished Sample Chip, 9mm	9902-2573-0	828492091012
Anatolia Atlantic Ocean Honed Sample Chip, 9mm	9902-2576-0	828492091043
Anatolia Atlantic Ocean Polished Sample Chip, 9mm	9902-2577-0	828492091050
Anatolia Bianco Gioia Honed Sample Chip, 9mm	9902-2580-0	828492091081
Anatolia Bianco Gioia Polished Sample Chip, 9mm	9902-2581-0	828492091098
Anatolia Bianco Gioia Vintage Sample Chip, 9mm	9902-2582-0	828492091104

Sample Chips	ITEM CODE	UPC
Anatolia Bianco Dior Honed Sample Chip, 9mm	9902-2578-0	828492091067
Anatolia Bianco Dior Polished Sample Chip, 9mm	9902-2579-0	828492091074
Anatolia Bianco Stratura Honed Sample Chip, 9mm	9902-2583-0	828492091111
Anatolia Bianco Stratura Polished Sample Chip, 9mm	9902-2584-0	828492091128
Anatolia Calacatta Borghini Honed Sample Chip, 9mm	9902-2585-0	828492091135
Anatolia Calacatta Borghini Polished Sample Chip, 9mm	9902-2586-0	828492091142
Anatolia Calacatta Borghini Vintage Sample Chip, 9mm	9902-2587-0	828492091159
Anatolia Calacatta Corchia Honed Sample Chip, 9mm	9902-2590-0	828492091180
Anatolia Calacatta Corchia Polished Sample Chip, 9mm	9902-2591-0	828492091197

Majesto Sample Chip Program

Sample Chips	ITEM CODE	UPC
Anatolia Calacatta Cremo Honed Sample Chip, 9mm	9902-2592-0	828492091203
Anatolia Calacatta Cremo Polished Sample Chip, 9mm	9902-2593-0	828492091210
Anatolia Calacatta Noir Honed Sample Chip, 9mm	9902-2594-0	828492091227
Anatolia Calacatta Noir Polished Sample Chip, 9mm	9902-2595-0	828492091234
Anatolia Calacatta Noir Vintage Sample Chip, 9mm	9902-2596-0	828492091241
Anatolia Calacatta Oro Honed Sample Chip, 9mm	9902-2597-0	828492091258
Anatolia Calacatta Oro Polished Sample Chip, 9mm	9902-2598-0	828492091265
Anatolia Calacatta Oro Vintage Sample Chip, 9mm	9902-2599-0	828492091272
Anatolia Ceppo di Gre Honed Sample Chip, 9mm	9902-2604-0	828492091326
Anatolia Ceppo di Gre Polished Sample Chip, 9mm	9902-2605-0	828492091333
Anatolia Ceppo di Gre Vintage Sample Chip, 9mm	9902-2606-0	828492091340
Anatolia Crystal Bianco Honed Sample Chip, 9mm	9902-2611-0	828492091395
Anatolia Crystal Bianco Polished Sample Chip, 9mm	9902-2612-0	828492091401
Anatolia Foresta Honed Sample Chip, 9mm	9902-2613-0	828492091418
Anatolia Foresta Polished Sample Chip, 9mm	9902-2614-0	828492091425
Anatolia Forge Eleganza Honed Sample Chip, 9mm	9902-2615-0	828492091432
Anatolia Forge Eleganza Polished Sample Chip, 9mm	9902-2616-0	828492091449
Anatolia Forge Eleganza Vintage Sample Chip, 9mm	9902-2617-0	828492091456
Anatolia French Vanilla Honed Sample Chip, 9mm	9902-2618-0	828492091463
Anatolia French Vanilla Polished Sample Chip, 9mm	9902-2619-0	828492091470
Anatolia French Vanilla Vintage Sample Chip, 9mm	9902-2620-0	828492091487
Anatolia Gemma Bronze Honed Sample Chip, 6mm	9902-2623-0	828492091517
Anatolia Gemma Bronze Polished Sample Chip, 6mm	9902-2624-0	828492091524
Anatolia Macchia Vecchia Honed Sample Chip, 6mm	9902-2650-0	828492091784
Anatolia Macchia Vecchia Polished Sample Chip, 6mm	9902-2651-0	828492091791
Anatolia Oro Noir Honed Sample Chip, 6mm	9902-2677-0	828492092057
Anatolia Oro Noir Polished Sample Chip, 6mm	9902-2678-0	828492092064
Anatolia Pietra Imperiale Honed Sample Chip, 9mm	9902-2681-0	828492092095
Anatolia Pietra Imperiale Polished Sample Chip, 9mm	9902-2682-0	828492092101
Anatolia Pietra Imperiale Vintage Sample Chip, 9mm	9902-3032-0	828492696385

Sample Chips	ITEM CODE	UPC
Anatolia Sahara Noir Honed Sample Chip, 9mm	9902-2686-0	828492092149
Anatolia Sahara Noir Polished Sample Chip, 9mm	9902-2687-0	828492092156
Anatolia Statuario Honed Sample Chip, 9mm	9902-2709-0	828492092378
Anatolia Statuario Polished Sample Chip, 9mm	9902-2710-0	828492092385
Anatolia Statuario Vintage Sample Chip, 9mm	9902-2711-0	828492092392
Anatolia Taj Mahal Honed Sample Chip, 9mm	9902-2714-0	828492092422
Anatolia Taj Mahal Polished Sample Chip, 9mm	9902-2715-0	828492092439
Anatolia Travertino Classico Grained Sample Chip, 9mm	9902-2716-0	828492092446
Anatolia Travertino Classico Honed Sample Chip, 9mm	9902-2717-0	828492092453
Anatolia Travertino Classico Organic Matte Sample Chip, 9mm	9902-2718-0	828492092460
Anatolia Travertino Titanium Grained Sample Chip, 9mm	9902-2719-0	828492092477
Anatolia Travertino Titanium Honed Sample Chip, 9mm	9902-2720-0	828492092484
Anatolia Travertino Titanium Organic Matte Sample Chip, 9mm	9902-2721-0	828492092491
Anatolia Verdi Alpi Honed Sample Chip, 9mm	9902-2722-0	828492092507
Anatolia Verdi Alpi Polished Sample Chip, 9mm	9902-2723-0	828492092514
Anatolia Tuscano Burgundy Polished Sample Chip, 6 mm	9902-3693-0	828492116845

Lithoform Sample Chip Program





Sample Chip Size: 4 x 5 in / 9.5 x 13.4 cm

Sample Chips	ITEM CODE	UPC
Anatolia Lithoform Coast - Crosscut Honed Sample Chip, 9mm	9902-2626-0	828492091548
Anatolia Lithoform Coast - Crosscut Organic Matte Sample Chip, 9mm	9902-2627-0	828492091555
Anatolia Lithoform Coast - Crosscut Vintage Sample Chip, 9mm	9902-2628-0	828492091562
Anatolia Lithoform Dunes - Crosscut Honed Sample Chip, 9mm	9902-2632-0	828492091609
Anatolia Lithoform Dunes - Crosscut Organic Matte Sample Chip, 9mm	9902-2633-0	828492091616
Anatolia Lithoform Dunes - Crosscut Vintage Sample Chip, 9mm	9902-2634-0	828492091623
Anatolia Lithoform Twilight - Crosscut Honed Sample Chip, 9mm	9902-2638-0	828492091661
Anatolia Lithoform Twilight - Crosscut Organic Matte Sample Chip, 9mm	9902-2639-0	828492091678
Anatolia Lithoform Twilight - Crosscut Vintage Sample Chip, 9mm	9902-2640-0	828492091685
Anatolia Lithoform Vista - Crosscut Honed Sample Chip, 9mm	9902-2644-0	828492091722
Anatolia Lithoform Vista - Crosscut Organic Matte Sample Chip, 9mm	9902-2645-0	828492091739
Anatolia Lithoform Vista - Crosscut Vintage Sample Chip, 9mm	9902-2646-0	828492091746

Sample Chips	ITEM CODE	UPC
Anatolia Lithoform Coast - Veincut Honed Sample Chip, 9mm	9902-2629-0	828492091579
Anatolia Lithoform Coast - Veincut Organic Matte Sample Chip, 9mm	9902-2630-0	828492091586
Anatolia Lithoform Coast - Veincut Vintage Sample Chip, 9mm	9902-2631-0	828492091593
Anatolia Lithoform Dunes - Veincut Honed Sample Chip, 9mm	9902-2635-0	828492091630
Anatolia Lithoform Dunes - Veincut Organic Matte Sample Chip, 9mm	9902-2636-0	828492091647
Anatolia Lithoform Dunes - Veincut Vintage Sample Chip, 9mm	9902-2637-0	828492091654
Anatolia Lithoform Twilight - Veincut Honed Sample Chip, 9mm	9902-2641-0	828492091692
Anatolia Lithoform Twilight - Veincut Organic Matte Sample Chip, 9mm	9902-2642-0	828492091708
Anatolia Lithoform Twilight - Veincut Vintage Sample Chip, 9mm	9902-2643-0	828492091715
Anatolia Lithoform Vista - Veincut Honed Sample Chip, 9mm	9902-2647-0	828492091753
Anatolia Lithoform Vista - Veincut Organic Matte Sample Chip, 9mm	9902-2648-0	828492091760
Anatolia Lithoform Vista - Veincut Vintage Sample Chip, 9mm	9902-2649-0	828492091777

Serena Sample Chip Program



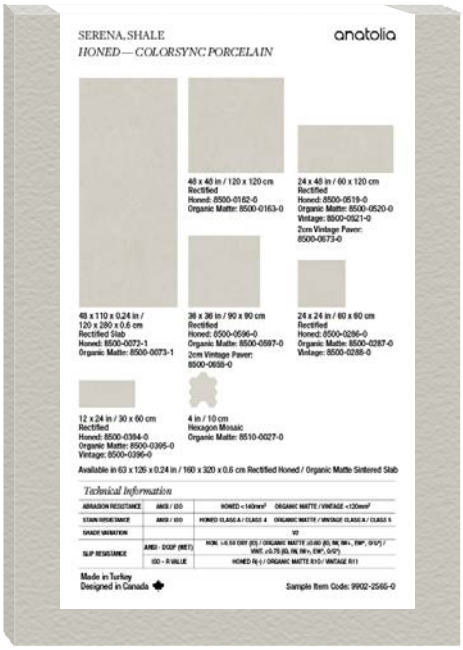

Sample Chip Size: 4 x 5 in / 9.5 x 13.4 cm

Sample Chips	ITEM CODE	UPC
Anatolia Serena Shale Honed Sample Chip, 9mm	9902-2565-0	828492090930
Anatolia Serena Shale Organic Matte Sample Chip, 9mm	9902-2566-0	828492090947
Anatolia Serena Shale Vintage Sample Chip, 9mm	9902-2567-0	828492090954
Anatolia Serena Crater Honed Sample Chip, 9mm	9902-2688-0	828492092163
Anatolia Serena Crater Organic Matte Sample Chip, 9mm	9902-2689-0	828492092170
Anatolia Serena Crater Vintage Sample Chip, 9mm	9902-2690-0	828492092187
Anatolia Serena Valley Honed Sample Chip, 9mm	9902-2704-0	828492092323
Anatolia Serena Valley Organic Matte Sample Chip, 9mm	9902-2705-0	828492092330
Anatolia Serena Valley Vintage Sample Chip, 9mm	9902-2706-0	828492092347

Sample Chips	ITEM CODE	UPC
Anatolia Serena Pewter Honed Sample Chip, 9mm	9902-2701-0	828492092293
Anatolia Serena Pewter Organic Matte Sample Chip, 9mm	9902-2702-0	828492092309
Anatolia Serena Pewter Vintage Sample Chip, 9mm	9902-2703-0	828492092316
Anatolia Serena Dusk Honed Sample Chip, 9mm	9902-2693-0	828492092217
Anatolia Serena Dusk Organic Matte Sample Chip, 9mm	9902-2694-0	828492092224
Anatolia Serena Dusk Vintage Sample Chip, 9mm	9902-2695-0	828492092231
Anatolia Serena Flint Honed Sample Chip, 9mm	9902-2696-0	828492092248
Anatolia Serena Flint Organic Matte Sample Chip, 9mm	9902-2697-0	828492092255
Anatolia Serena Flint Vintage Sample Chip, 9mm	9902-2698-0	828492092262

Monoforma Sample Chip Program



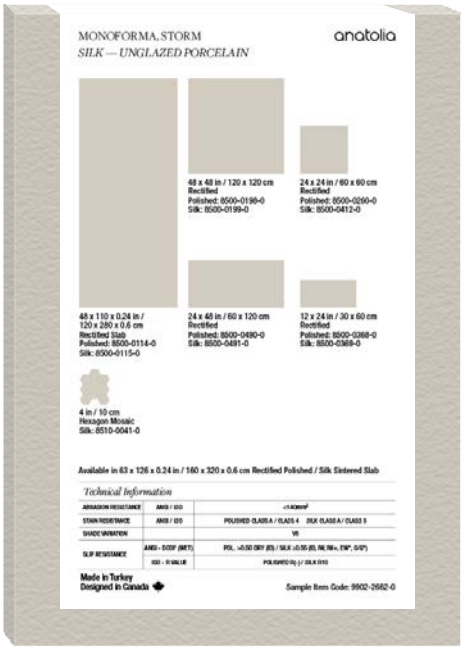

Sample Chip Size: 4 x 5 in / 9.5 x 13.4 cm

Sample Chips	ITEM CODE	UPC
Anatolia Monoforma Moonlight Honed Sample Chip, 9mm	9902-2654-0	828492091821
Anatolia Monoforma Moonlight Polished Sample Chip, 9mm	9902-2655-0	828492091838
Anatolia Monoforma Moonlight Silk Sample Chip, 9mm	9902-2656-0	828492091845
Anatolia Monoforma Oasis Polished Sample Chip, 9mm	9902-2657-0	828492091852
Anatolia Monoforma Oasis Silk Sample Chip, 9mm	9902-2658-0	828492091869
Anatolia Monoforma Storm Polished Sample Chip, 9mm	9902-2661-0	828492091890
Anatolia Monoforma Storm Silk Sample Chip, 9mm	9902-2662-0	828492091906
Anatolia Monoforma Silhouette Polished Sample Chip, 9mm	9902-2659-0	828492091876
Anatolia Monoforma Silhouette Silk Sample Chip, 9mm	9902-2660-0	828492091883

Lustra Sample Chip Program





Sample Chip Size: 4 x 5 in / 9.5 x 13.4 cm

Sample Chips	ITEM CODE	UPC
Anatolia Lustra Onyx Crema Honed Sample Chip, 9mm	9902-2671-0	828492091999
Anatolia Lustra Onyx Crema Polished Sample Chip, 9mm	9902-2672-0	828492092002
Anatolia Lustra Onyx Sage Honed Sample Chip, 9mm	9902-2673-0	828492092019
Anatolia Lustra Onyx Sage Polished Sample Chip, 9mm	9902-2674-0	828492092026

Sample Chips	ITEM CODE	UPC
Anatolia Lustra Onyx Hazel Honed Sample Chip, 9mm	9902-2675-0	828492092033
Anatolia Lustra Onyx Hazel Polished Sample Chip, 9mm	9902-2676-0	828492092040
Anatolia Lustra Onyx Feather Honed Sample Chip, 9mm	9902-3357-0	828492099704
Anatolia Lustra Onyx Feather Polished Sample Chip, 9mm	9902-3358-0	828492099711

Architeq Micro Sample Chip Program





Sample Chip Size: 4 x 5 in / 9.5 x 13.4 cm

Sample Chips	ITEM CODE	UPC
Architeq Micro Bone Honed Sample Chip, 9 mm	9902-3497-0	828492111635
Architeq Micro Bone Organic Matte Sample Chip, 9 mm	9902-3507-0	828492111536
Architeq Micro Sand Honed Sample Chip, 9 mm	9902-3503-0	828492111574
Architeq Micro Sand Organic Matte Sample Chip, 9 mm	9902-3513-0	828492111475
Architeq Micro Clay Honed Sample Chip, 9 mm	9902-3498-0	828492111628
Architeq Micro Clay Organic Matte Sample Chip, 9 mm	9902-3508-0	828492111529
Architeq Micro Earth Honed Sample Chip, 9 mm	9902-3500-0	828492111604
Architeq Micro Earth Organic Matte Sample Chip, 9 mm	9902-3510-0	828492111505
Architeq Micro Mist Honed Sample Chip, 9 mm	9902-3502-0	828492111581
Architeq Micro Mist Organic Matte Sample Chip, 9 mm	9902-3512-0	828492111482

Sample Chips	ITEM CODE	UPC
Architeq Micro Storm Honed Sample Chip, 9 mm	9902-3506-0	828492111543
Architeq Micro Storm Organic Matte Sample Chip, 9 mm	9902-3516-0	828492111444
Architeq Micro Moss Honed Sample Chip, 9 mm	9902-3505-0	828492111550
Architeq Micro Moss Organic Matte Sample Chip, 9 mm	9902-3515-0	828492111451
Architeq Micro Smoke Honed Sample Chip, 9 mm	9902-3504-0	828492111567
Architeq Micro Smoke Organic Matte Sample Chip, 9 mm	9902-3514-0	828492111468
Architeq Micro Cocoa Honed Sample Chip, 9 mm	9902-3499-0	828492111611
Architeq Micro Cocoa Organic Matte Sample Chip, 9 mm	9902-3509-0	828492111512
Architeq Micro Graphite Honed Sample Chip, 9 mm	9902-3501-0	828492111598
Architeq Micro Graphite Organic Matte Sample Chip, 9 mm	9902-3511-0	828492111499

Huxley Sample Chip Program





Sample Chip Size: 4 x 5 in / 9.5 x 13.4 cm

Sample Chips	ITEM CODE	UPC
Anatolia 9.5 x 13.4 cm Huxley Bleached Maple Organic Matte Sample Chip, 9 mm	9902-3696-0	828492117507
Anatolia 9.5 x 13.4 cm Huxley Golden Birch Organic Matte Sample Chip, 9 mm	9902-3697-0	828492117491
Anatolia 9.5 x 13.4 cm Huxley Honey Oak Organic Matte Sample Chip, 9 mm	9902-3698-0	828492117484
Anatolia 9.5 x 13.4 cm Huxley Sand Elm Organic Matte Sample Chip, 9 mm	9902-3699-0	828492117477
Anatolia 9.5 x 13.4 cm Huxley Weathered Oak Organic Matte Sample Chip, 9 mm	9902-3700-0	828492117460
Anatolia 9.5 x 13.4 cm Huxley Smoked Walnut Organic Matte Sample Chip, 9 mm	9902-3701-0	828492117453

Majesto Sample Program

For select colors that do not include the 12 x 24 in / 29.8 x 59.8 cm format as part of the collection, Anatolia's sample program is offered in a refined 12 x 18 in / 30 x 45 cm size, expertly crafted to provide an impeccable balance of detail and portability. This versatile sample elegantly captures the intricate textures, veining, and color variations of our exclusive collections. The thoughtfully proportioned dimensions ensure that each design element is showcased with precision, offering a sophisticated solution for any showroom.

Anatolia's innovative sample program includes essential information on the back label, providing easy access to further details about each color. Designed with a modern aesthetic in mind, maintaining a clean and contemporary look.



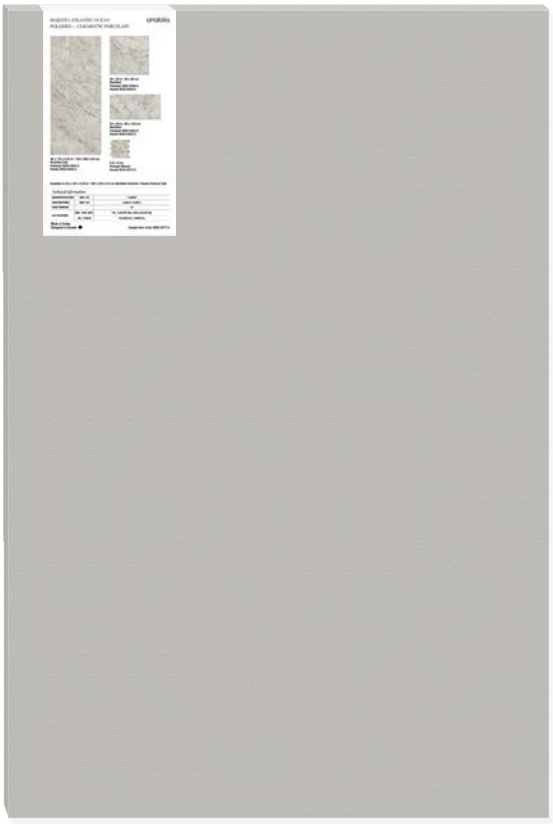

Sample Chip Size: 12 x 18 in / 30 x 45 cm

Sample Chips	ITEM CODE	UPC
Anatolia Atlantic Ocean Honed Sample Chip, 9mm	9902-2468-0	828492090299
Anatolia Atlantic Ocean Polished Sample Chip, 9mm	9902-2460-0	828492090213
Anatolia Bianco Dior Honed Sample Chip, 6mm	9902-2473-0	828492090343
Anatolia Bianco Dior Polished Sample Chip, 6mm	9902-2465-0	828492090268
Anatolia Gemma Bronze Honed Sample Chip, 6mm	9902-2467-0	828492090282
Anatolia Gemma Bronze Polished Sample Chip, 6mm	9902-2459-0	828492090206
Anatolia Foresta Honed Sample Chip, 9mm	9902-2470-0	828492090312
Anatolia Foresta Polished Sample Chip, 9mm	9902-2462-0	828492090237

Sample Chips	ITEM CODE	UPC
Anatolia Macchia Vecchia Honed Sample Chip, 6mm	9902-2471-0	828492090329
Anatolia Macchia Vecchia Polished Sample Chip, 6mm	9902-2463-0	828492090244
Anatolia Oro Noir Honed Sample Chip, 6mm	9902-2472-0	828492090336
Anatolia Oro Noir Polished Sample Chip, 6mm	9902-2464-0	828492090251
Anatolia Sahara Noir Honed Sample Chip, 9mm	9902-2474-0	828492090350
Anatolia Sahara Noir Polished Sample Chip, 9mm	9902-2466-0	828492090275
Anatolia Verdi Alpi Honed Sample Chip, 9mm	9902-2469-0	828492090305
Anatolia Verdi Alpi Polished Sample Chip, 9mm	9902-2461-0	828492090220
Anatolia Tuscano Burgundy Polished Sample Chip, 6 mm	9902-3705-0	828492117729

Sintered Slab Sample Program



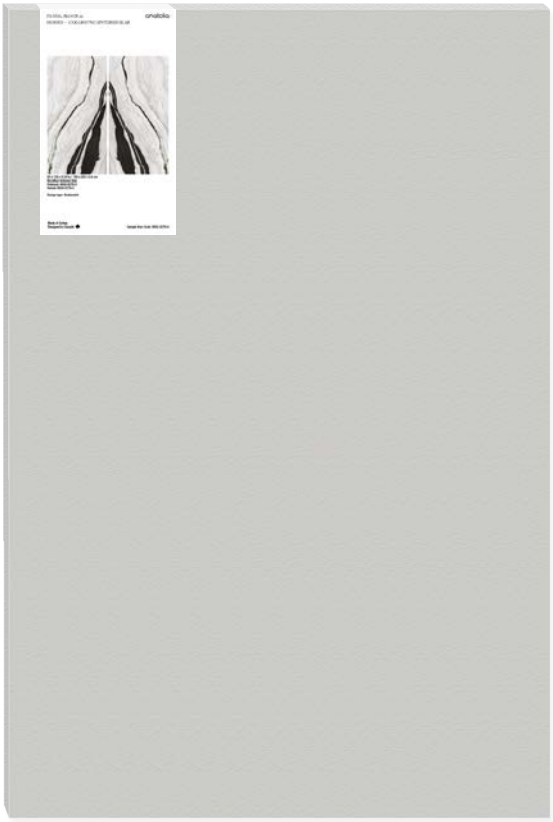

Sample Chip Size: 12 x 18 in / 30 x 45 cm

Sample Chips	ITEM CODE
Anatolia 30 x 45 cm Arabescato Vagli Polished Sample Chip, 6mm	9902-3065-0
Anatolia 30 x 45 cm Arabescato Vagli Honed Sample Chip, 6mm	9902-3066-0
Anatolia 30 x 45 cm Montagna Grey Polished Sample Chip, 6mm	9902-3067-0
Anatolia 30 x 45 cm Montagna Grey Honed Sample Chip, 6mm	9902-3068-0
Anatolia 30 x 45 cm Panda Polished Sample Chip, 6mm	9902-3069-0
Anatolia 30 x 45 cm Panda Honed Sample Chip, 6mm	9902-3070-0
Anatolia 30 x 45 cm Colorado Lincoln Polished Sample Chip, 6mm	9902-3071-0
Anatolia 30 x 45 cm Colorado Lincoln Honed Sample Chip, 6mm	9902-3072-0
Anatolia 30 x 45 cm Fusion White Polished Sample Chip, 6mm	9902-3073-0
Anatolia 30 x 45 cm Fusion White Honed Sample Chip, 6mm	9902-3074-0
Anatolia 30 x 45 cm Calacatta Picasso Polished Sample Chip, 6mm	9902-3075-0
Anatolia 30 x 45 cm Calacatta Picasso Honed Sample Chip, 6mm	9902-3076-0
Anatolia 30 x 45 cm Calacatta Viola Polished Sample Chip, 6mm	9902-3077-0
Anatolia 30 x 45 cm Calacatta Viola Honed Sample Chip, 6mm	9902-3078-0

Sample Chips	ITEM CODE
Anatolia 30 x 45 cm Cristallo Polished Sample Chip, 6mm	9902-3079-0
Anatolia 30 x 45 cm Cristallo Honed Sample Chip, 6mm	9902-3080-0
Anatolia 30 x 45 cm Marina White Polished Sample Chip, 6mm	9902-3081-0
Anatolia 30 x 45 cm Marina White Honed Sample Chip, 6mm	9902-3082-0
Anatolia 30 x 45 cm Grigio Quarzo Honed Sample Chip, 6mm	9902-3083-0
Anatolia 30 x 45 cm Montagna Jade Polished Sample Chip, 6mm	9902-3084-0
Anatolia 30 x 45 cm Montagna Jade Honed Sample Chip, 6mm	9902-3085-0
30 x 45 cm Publica Thunder Organic Matte Sample Chip, 6mm	9902-3086-0
30 x 45 cm Publica Thunder Patinated Sample Chip, 6mm	9902-3087-0
30 x 45 cm Publica Horizon Organic Matte Sample Chip, 6mm	9902-3088-0
30 x 45 cm Publica Horizon Patinated Sample Chip, 6mm	9902-3089-0
30 x 45 cm Publica Terrain Organic Matte Sample Chip, 6mm	9902-3090-0
30 x 45 cm Publica Terrain Patinated Sample Chip, 6mm	9902-3091-0

Sample Chip Carrying Case - Up to 32 6mm Sample Chips

SIZES AT A GLANCE
Up to 21 9mm or 32 6mm Anatolia Sample Chips

Anatolia proudly presents our premium sample chip carrying case, designed to elevate the way you store, organize, and transport your sample chips. Crafted with both elegance and practicality in mind, this sleek carrying case offers the perfect solution for keeping your sample chips organized and easily accessible for meetings, presentations, or showroom displays. The case, which comes empty, is designed to comfortably hold up to 21 9mm or 32 6mm sample chips, allowing you to showcase a curated selection of Anatolia's stunning materials, ensuring maximum color variety. The sample selection is fully customizable to suit your design preferences and needs. Whether you're on the go or storing samples in your library, this luxurious case ensures your collection is both beautifully presented and effortlessly portable—making it an essential tool for any design professional seeking to impress.







ITEM DESCRIPTION	ITEM CODE	UPC
Anatolia Sample Chip Carrying Case (Black) (Empty)	9902-2035-0	828492090428

Ordering Options*:
1. Custom Selection Personalize your sample chip selection for a unique range. This option does not arrange the selection into specific boxes.
2. Custom Selection Sets Create your own custom set choosing from one of the two options with a personalized selection of sample chips. An order of 32 identical sets is required, each arranged and packaged together in separate boxes.

*Please specify the required colors, finishes and thicknesses when placing the order through your Business Development Manager.

Showroom Display Fixtures

ASSORTMENT AT A GLANCE
Anatolia MDF Dealer Showroom Boards
Anatolia 6mm Porcelain Slab
Anatolia 6mm Sintered Slab*

This customizable standing display structure showcases the essence of Anatolia's collections in an elegant presentation. The structure is designed to be able to allow a selection of a custom assortment. Each curated board highlights the diverse tile formats and colors offered in the collection and includes an information panel that provides more details alongside a meticulously crafted room scene. Careful attention has been given to optimizing the display space, ensuring an inspiring and efficient presentation of the tailored collections. The display also incorporates a tailored lighting system designed to highlight the collection in the most flattering manner. Working closely with the Anatolia Business Development Manager and Interior Designer, we will customize your showroom to design the perfect solution to fit your needs. We provide provide details and instructions for you to directly manage the installation in your showroom.

This versatile display is fully compatible with the MDF Dealer Showroom Boards, offering a refined and cohesive presentation across Anatolia's tile collections.



*Full size slabs are cut to 120 x 280 cm.

Showroom Display Fixtures at a Glance

Key specifications and item codes

Fixture replacement codes are listed below. For the initial installation, your Anatolia Interior Design team will advise exactly on what is required for a successful initial setup.

ITEM DESCRIPTIONS	ITEM CODE	UPC
1. 9 ft Display Board Fixture - Main Upright	9902-1437-0	828492070505
2. 11 ft Display Board Fixture - Main Upright	9902-1438-0	828492070512
3. Display board Fixture - 1 way top connector	9902-1441-0	828492070543
4. Display Board Fixture - 2 way top connector	9902-1442-0	828492070550
5. Display board Fixture - Horizontal Middle Connector	9902-1443-0	828492070567
6. Display Board Fixture - Horizontal End Connector	9902-1444-0	828492070574
7. Display Board Fixture - Horizontal Side Connector	9902-1445-0	828492070581
8. Display Board Fixture - Wall Mounting Bracket	9902-1439-0	828492070529
PANEL LIGHTNING COMPONENTS		
Showroom Fixture Light	9902-1654-0	828492074794
Showroom Fixture Light Track, 6 ft	9902-1655-0	828492074800
Showroom Fixture Light End Feed	9902-1656-0	828492074817
Showroom Fixture Light Connector	9902-1657-0	828492074824
ADDITIONAL COMPONENTS		
28 x 6 x 3/4 in Slab Display MDF Cleats - Set of 3	9902-3341-0	828492099490
Anatolia Logo & Plexiglass Label Holder Kit - 1 PC	9901-0088-0	828492099506
9.5 x 13.4 cm Sample Label – 1 PC	9902-3340-0	828492099483

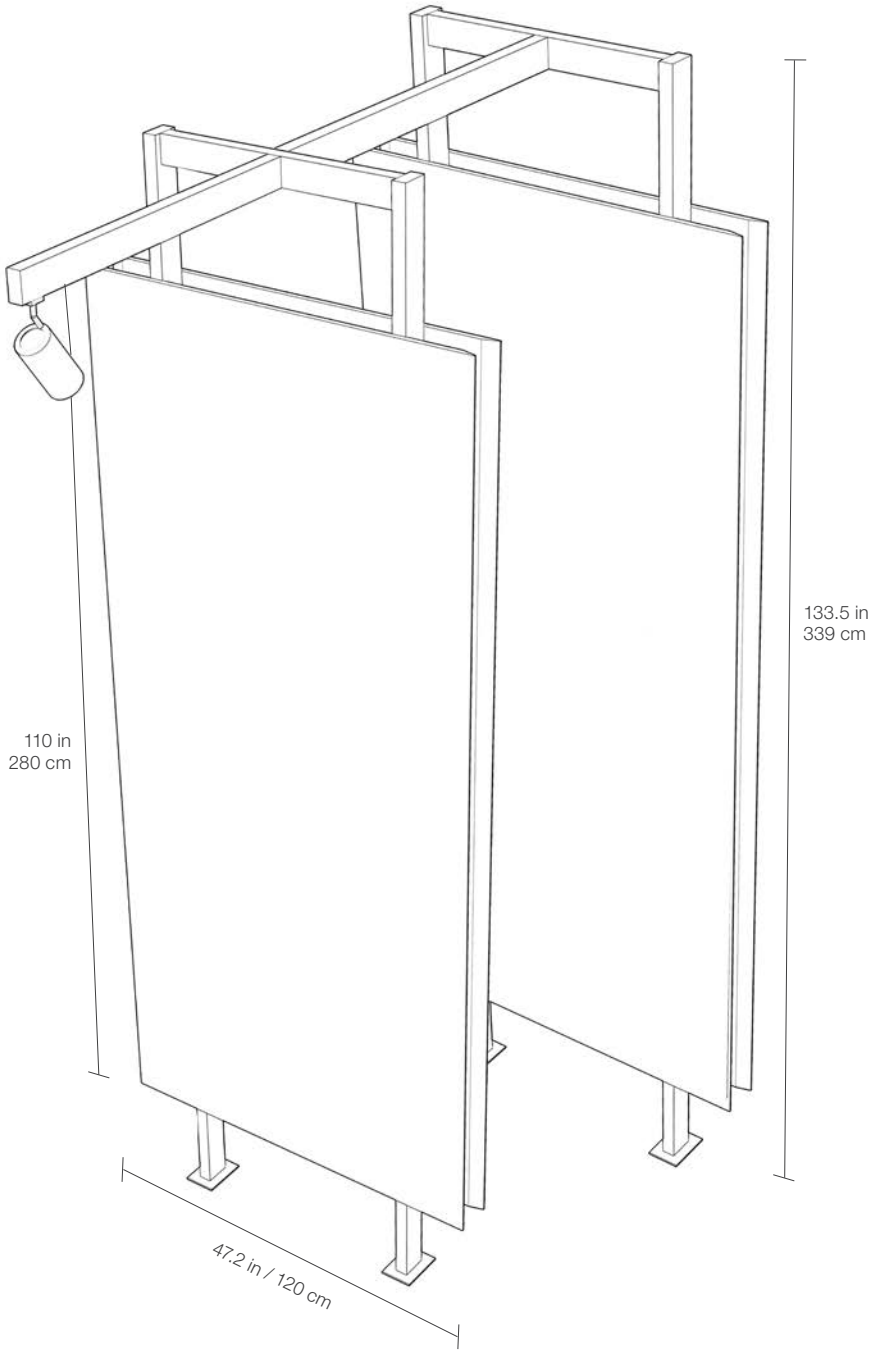

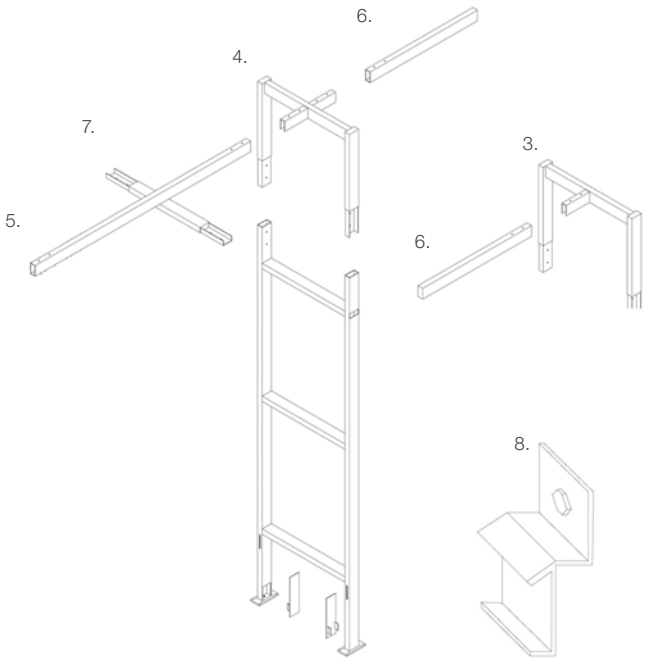

Labels can be ordered using the code above. Please specify the required colors and finishes when placing the order through your Anatolia Business Development Manager.

Showroom Display Boards at a Glance

This customizable standing display structure showcases the essence of Anatolia's collections in an elegant presentation. The structure is designed to be able to allow a selection of a custom assortment. Each curated board highlights the diverse tile formats and colors offered in the collection and includes an information panel that provides more details alongside a meticulously crafted room scene. Careful attention has been given to optimizing the display space, ensuring an inspiring and efficient presentation of the tailored collections. The display also incorporates a tailored lighting system designed to highlight the collection in the most flattering manner. Working closely with the Anatolia Business Development Manager and Interior Designer, we will customize your showroom to design the perfect solution to fit your needs. The boards delivered are all professionally installed boards, and we provide details and instructions for you to directly manage the installation in your showroom.



Arabescato Corchia Showroom 11' Ft Tall Display Board



Calacatta Oro Showroom 11' Ft Tall Display Board



Travertino Classico Showroom 11' Ft Tall Display Board

Showroom Display Boards at a Glance

11' Foot Tall Showroom Dealer Panels	ITEM CODE
Anatolia 48 x 110.25 x 0.75 in Majesto Taj Mahal / Calacatta Cremo Showroom Display Board	9902-3342-0
Anatolia 48 x 110.25 x 0.75 in Majesto Crystal Bianco / Calacatta Corchia Showroom Display Board	9902-3343-0
Anatolia 48 x 110.25 x 0.75 in Majesto Arabescato Corchia / Arial Bianco Showroom Display Board	9902-3344-0
Anatolia 48 x 110.25 x 0.75 in Majesto Forge Eleganza / Statuario Showroom Display Board	9902-3347-0
Anatolia 48 x 110.25 x 0.75 in Majesto French Vanilla / Calacatta Oro Showroom Display Board	9902-3348-0
Anatolia 48 x 110.25 x 0.75 in Majesto Calacatta Borghini / Pietra Imperiale Showroom Display Board	9902-3349-0
Anatolia 48 x 110.25 x 0.75 in Majesto Bianco Gioia / Calacatta Noir Showroom Display Board	9902-3350-0
Anatolia 48 x 110.25 x 0.75 in Majesto Sahara Noir / Foresta Showroom Display Board	9902-3355-0
Anatolia 48 x 110.25 x 0.75 in Majesto Verdi Alpi / Atlantic Ocean Showroom Display Board	9902-3356-0
Anatolia 48 x 110.25 x 0.75 in Majesto Bianco Stratura Showroom Display Board	9902-3359-0
Anatolia 48 x 110.25 x 0.75 in Majesto Travertino Classico / Titanium Showroom Display Board	9902-3360-0
Anatolia 48 x 110.25 x 0.75 in Majesto Ceppo Di Gre Showroom Display Board	9902-3361-0
Anatolia 48 x 110.25 x 0.75 in Majesto Taj Mahal Showroom Display Board	9902-3428-0
Anatolia 48 x 110.25 x 0.75 in Majesto Calacatta Cremo Showroom Display Board	9902-3429-0
Anatolia 48 x 110.25 x 0.75 in Majesto Calacatta Corchia Showroom Display Board	9902-3430-0
Anatolia 48 x 110.25 x 0.75 in Majesto Crystal Bianco Showroom Display Board	9902-3431-0
Anatolia 48 x 110.25 x 0.75 in Majesto Arabescato Corchia Showroom Display Board	9902-3432-0
Anatolia 48 x 110.25 x 0.75 in Majesto Ariel Bianco Showroom Display Board	9902-3433-0
Anatolia 48 x 110.25 x 0.75 in Majesto Forge Eleganza Showroom Display Board	9902-3434-0
Anatolia 48 x 110.25 x 0.75 in Majesto Staturario Showroom Display Board	9902-3435-0
Anatolia 48 x 110.25 x 0.75 in Majesto French Vanilla Showroom Display Board	9902-3436-0
Anatolia 48 x 110.25 x 0.75 in Majesto Calacatta Oro Showroom Display Board	9902-3437-0
Anatolia 48 x 110.25 x 0.75 in Majesto Calacatta Borghini Showroom Display Board	9902-3438-0
Anatolia 48 x 110.25 x 0.75 in Majesto Pietra Imperiale Showroom Display Board	9902-3439-0
Anatolia 48 x 110.25 x 0.75 in Majesto Bianco Gioia Showroom Display Board	9902-3440-0
Anatolia 48 x 110.25 x 0.75 in Majesto Calacatta Noir Showroom Display Board	9902-3441-0
Anatolia 48 x 110.25 x 0.75 in Majesto Sahara Noir Showroom Display Board	9902-3442-0
Anatolia 48 x 110.25 x 0.75 in Majesto Foresta Showroom Display Board	9902-3443-0
Anatolia 48 x 110.25 x 0.75 in Majesto Verdi Alpi Showroom Display Board	9902-3444-0

11' Foot Tall Showroom Dealer Panels	ITEM CODE
Anatolia 48 x 110.25 x 0.75 in Majesto Atlantic Ocean Showroom Display Board	9902-3445-0
Anatolia 48 x 110.25 x 0.75 in Majesto Travertino Classico Showroom Display Board	9902-3446-0
Anatolia 48 x 110.25 x 0.75 in Majesto Travertino Titanium Showroom Display Board	9902-3447-0
Anatolia 48 x 110.25 x 0.75 in Lustra Onyx Crema / Onyx Hazel Showroom Display Board	9902-3345-0
Anatolia 48 x 110.25 x 0.75 in Lustra Onyx Feather / Onyx Sage Showroom Display Board	9902-3346-0
Anatolia 48 x 110.25 x 0.75 in Serena Dusk / Pewter Showroom Display Board	9902-3362-0
Anatolia 48 x 110.25 x 0.75 in Serena Crater / Valley Showroom Display Board	9902-3363-0
Anatolia 48 x 110.25 x 0.75 in Serena Shale / Flint Showroom Display Board	9902-3364-0
Anatolia 48 x 110.25 x 0.75 in Lithoform Crosscut Dune / Coast Showroom Display Board	9902-3365-0
Anatolia 48 x 110.25 x 0.75 in Lithoform Crosscut Vista / Twilight Showroom Display Board	9902-3366-0
Anatolia 48 x 110.25 x 0.75 in Lithoform Veincut Dune / Coast Showroom Display Board	9902-3367-0
Anatolia 48 x 110.25 x 0.75 in Lithoform Veincut Vista / Twlight Showroom Display Board	9902-3368-0
Anatolia 48 x 110.25 x 0.75 in Monoforma Storm / Sillhouette Showroom Display Board	9902-3369-0
Anatolia 48 x 110.25 x 0.75 in Monoforma Moonlight / Oasis Showroom Display Board	9902-3370-0
Anatolia 48 x 110.25 x 0.75 in Architeq Micro Moss / Storm Showroom Display Board	9902-3627-0
Anatolia 48 x 110.25 x 0.75 in Architeq Micro Cocoa / Graphite Showroom Display Board	9902-3628-0
Anatolia 48 x 110.25 x 0.75 in Architeq Micro Sand / Clay Showroom Display Board	9902-3629-0
Anatolia 48 x 110.25 x 0.75 in Architeq Micro Bone / Earth Showroom Display Board	9902-3630-0
Anatolia 48 x 110.25 x 0.75 in Architeq Micro Mist / Smoke Showroom Display Board	9902-3631-0
Anatolia 48 x 110.25 in Huxley Bleached Maple / Golden Birch Showroom Display Board	9902-3719-0
Anatolia 48 x 110.25 in Huxley Honey Oak / Smoked Walnut Showroom Display Board	9902-3718-0
Anatolia 48 x 110.25 in Huxley Weathered Oak / Sand Elm Showroom Display Board	9902-3717-0
Anatolia 48 x 110.25 in Majesto Tuscano Burgundy Display Showroom Display Board	9902-3720-0

Customers may purchase any 48 x 110 x 0.24 in / 120 x 280 x 0.6 cm Porcelain Slab of their choice for installation on the 11' or 9' showroom fixture.

Showroom Display Boards at a Glance

9' Foot Tall Showroom Dealer Panels	ITEM CODE
Anatolia 48 x 89 x 0.75 in Majesto Taj Mahal / Calacatta Cremo Showroom Display Board	9902-3371-0
Anatolia 48 x 89 x 0.75 in Majesto Crystal Bianco / Calacatta Corchia Showroom Display Board	9902-3372-0
Anatolia 48 x 89 x 0.75 in Majesto Arabescato Corchia / Arial Bianco Showroom Display Board	9902-3373-0
Anatolia 48 x 89 x 0.75 in Majesto Forge Eleganza / Statuario Showroom Display Board	9902-3376-0
Anatolia 48 x 89 x 0.75 in Majesto French Vanilla / Calacatta Oro Showroom Display Board	9902-3377-0
Anatolia 48 x 89 x 0.75 in Majesto Calacatta Borghini / Pietra Imperiale Showroom Display Board	9902-3378-0
Anatolia 48 x 89 x 0.75 in Majesto Bianco Gioia / Calacatta Noir Showroom Display Board	9902-3379-0
Anatolia 48 x 89 x 0.75 in Majesto Sahara Noir / Foresta Showroom Display Board	9902-3384-0
Anatolia 48 x 89 x 0.75 in Majesto Verdi Alpi / Atlantic Ocean Showroom Display Board	9902-3385-0
Anatolia 48 x 89 x 0.75 in Majesto Bianco Stratura Showroom Display Board	9902-3386-0
Anatolia 48 x 89 x 0.75 in Majesto Travertino Classico / Titanium Showroom Display Board	9902-3387-0
Anatolia 48 x 89 x 0.75 in Majesto Ceppo Di Gre Showroom Display Board	9902-3388-0
Anatolia 48 x 89 x 0.75 in Majesto Taj Mahal Showroom Display Board	9902-3448-0
Anatolia 48 x 89 x 0.75 in Majesto Calacatta Cremo Showroom Display Board	9902-3449-0
Anatolia 48 x 89 x 0.75 in Majesto Calacatta Corchia Showroom Display Board	9902-3450-0
Anatolia 48 x 89 x 0.75 in Majesto Crystal Bianco Showroom Display Board	9902-3451-0
Anatolia 48 x 89 x 0.75 in Majesto Arabescato Corchia Showroom Display Board	9902-3452-0
Anatolia 48 x 89 x 0.75 in Majesto Ariel Bianco Showroom Display Board	9902-3453-0
Anatolia 48 x 89 x 0.75 in Majesto Forge Eleganza Showroom Display Board	9902-3454-0
Anatolia 48 x 89 x 0.75 in Majesto Staturario Showroom Display Board	9902-3455-0
Anatolia 48 x 89 x 0.75 in Majesto French Vanilla Showroom Display Board	9902-3456-0
Anatolia 48 x 89 x 0.75 in Majesto Calacatta Oro Showroom Display Board	9902-3457-0
Anatolia 48 x 89 x 0.75 in Majesto Calacatta Borghini Showroom Display Board	9902-3453-0
Anatolia 48 x 89 x 0.75 in Majesto Pietra Imperiale Showroom Display Board	9902-3459-0
Anatolia 48 x 89 x 0.75 in Majesto Bianco Gioia Showroom Display Board	9902-3460-0
Anatolia 48 x 89 x 0.75 in Majesto Calacatta Noir Showroom Display Board	9902-3461-0
Anatolia 48 x 89 x 0.75 in Majesto Sahara Noir Showroom Display Board	9902-3462-0
Anatolia 48 x 89 x 0.75 in Majesto Foresta Showroom Display Board	9902-3463-0
Anatolia 48 x 89 x 0.75 in Majesto Verdi Alpi Showroom Display Board	9902-3464-0

9' Foot Tall Showroom Dealer Panels	ITEM CODE
Anatolia 48 x 89 x 0.75 in Majesto Atlantic Ocean Showroom Display Board	9902-3465-0
Anatolia 48 x 89 x 0.75 in Majesto Travertino Classico Showroom Display Board	9902-3466-0
Anatolia 48 x 89 x 0.75 in Majesto Travertino Titanium Showroom Display Board	9902-3467-0
Anatolia 48 x 89 x 0.75 in Lustra Onyx Crema / Onyx Hazel Showroom Display Board	9902-3374-0
Anatolia 48 x 89 x 0.75 in Lustra Onyx Feather / Onyx Sage Showroom Display Board	9902-3375-0
Anatolia 48 x 89 x 0.75 in Serena Dusk / Pewter Showroom Display Board	9902-3389-0
Anatolia 48 x 89 x 0.75 in Serena Crater / Valley Showroom Display Board	9902-3390-0
Anatolia 48 x 89 x 0.75 in Serena Shale / Flint Showroom Display Board	9902-3391-0
Anatolia 48 x 89 x 0.75 in Lithoform Crosscut Dune / Coast Showroom Display Board	9902-3392-0
Anatolia 48 x 89 x 0.75 in Lithoform Crosscut Vista / Twilight Showroom Display Board	9902-3393-0
Anatolia 48 x 89 x 0.75 in Lithoform Veincut Dune / Coast / Vista Showroom Display Board	9902-3394-0
Anatolia 48 x 89 x 0.75 in Lithoform Veincut Twlight Showroom Display Board	9902-3395-0
Anatolia 48 x 89 x 0.75 in Monoforma Storm / Sillhouette Showroom Display Board	9902-3396-0
Anatolia 48 x 89 x 0.75 in Monoforma Moonlight / Oasis Showroom Display Board	9902-3397-0
Anatolia 48 x 89 x 0.75 in Architeq Micro Moss / Storm Showroom Display Board	9902-3632-0
Anatolia 48 x 89 x 0.75 in Architeq Micro Cocoa / Graphite Showroom Display Board	9902-3633-0
Anatolia 48 x 89 x 0.75 in Architeq Micro Sand / Clay Showroom Display Board	9902-3634-0
Anatolia 48 x 89 x 0.75 in Architeq Micro Bone / Earth Showroom Display Board	9902-3635-0
Anatolia 48 x 89 x 0.75 in Architeq Micro Mist / Smoke Showroom Display Board	9902-3636-0
Anatolia 48 x 89 in Majesto Tuscano Burgundy Display Showroom Display Board	9902-3716-0
Anatolia 48 x 89 in Huxley Bleached Maple / Golden Birch Showroom Display Board	9902-3715-0
Anatolia 48 x 89 in Huxley Honey Oak / Smoked Walnut Showroom Display Board	9902-3714-0
Anatolia 48 x 89 in Huxley Weathered Oak / Sand Elm Showroom Display Board	9902-3713-0

Customers may purchase any 48 x 110 x 0.24 in / 120 x 280 x 0.6 cm Porcelain Slab of their choice for installation on the 11' or 9' showroom fixture.

Showroom Waterfall Display

CONFIGURATIONS AT A GLANCE
3-Piece Modular Kit
6-Piece Set Configuration
12-Piece Set Configuration

Maximize your showroom's potential with our innovative modular sintered slab display. Designed with a sleek, angled configuration, this display allows you to present a wider variety of 6 mm slabs in a compact footprint by featuring the sintered slabs cut at a smaller width. Each slab sample* is 60 x 280 cm, ideal for spaces with limited room. Each modular unit accommodates three slabs and can be seamlessly combined with side panels to create configurations against a wall or as a freestanding central island using the connectors. A key benefit is that it features a non-fixed system, this display enables you to effortlessly switch out slab selections with ease, or change the direction of how you want the samples to be displayed. Enhance both the aesthetics and functionality of your showroom while providing clients with an expanded selection of Anatolia's premium surfaces, all in a beautifully organized and space-efficient manner.



*A Plexiglass Label Holder with the Sample Label comes pre-affixed to the 6 mm sample. It also includes 9.5 x 13.4 cm Sample Chips in all other available finishes for that color, designed to be installed directly beneath plexiglass.

Showroom Waterfall Display

Available in a 3-piece modular kit, this display's angled design reduces its width, allowing you to showcase a broader selection of 6 mm slabs. Effortlessly expand your display, by adding additional kits without compromising on space. Perfect for tight showroom layouts, the wall configuration optimizes surface area while keeping your premium slabs organized and easily accessible for clients. Its sleek design elevates both the aesthetics and functionality of your display, making it a smart, space-efficient solution.



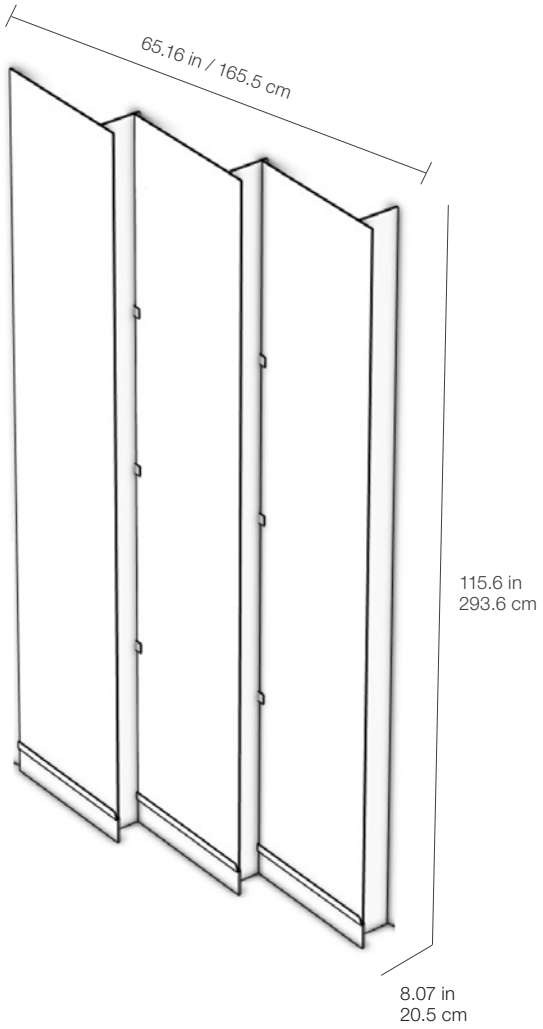

ITEM DESCRIPTION	ITEM CODE	UPC
Waterfall Slab Display Kit, 3 Panels	9901-0085-0	828492089910
Waterfall Slab Display Metal Fixture	9902-2068-0	828492090244
Waterfall Slab Display Wooden Side Cover - Set of 3	9902-2511-0	828492089927
ADDITIONAL COMPONENTS		
Waterfall Slab Display Connector - 6 Panels	9902-2069-0	828492090251
9.5 x 13.4 cm Plexiglass Label Holder - 1 PC	9902-3011-0	828492099452
9.5 x 13.4 cm Sample Label – 1 PC	9902-3340-0	828492099483

3-PIECE WALL CONFIGURATION	TOTAL #
WATERFALL SLAB DISPLAY KIT	1
60 x 280 cm Sample (Included with each 6 mm sample: pre-affixed Plexiglass Label Holder with Sample Label and Sample Chips in all other available finishes for that color)	3

Labels can be ordered using the code above. Please specify the required colors and finishes when placing the order through your Anatolia Business Development Manager.

Showroom Waterfall Display Configurations at a glance

For a more dynamic presentation, Anatolia's waterfall display offers modular flexibility in which the 3 pc kit can be combined with additional kits and connectors to form a central island configuration. With the option to feature slabs on both sides, this display can be configured in a variety of arrangements, including a 6-piece or 12-piece set as shown below. Effortlessly expand your display without any additional components by adding additional sets, allowing you to scale according to your showroom's needs. The angled design not only saves space but also enhances the visibility of your entire slab collection, offering clients a convenient and engaging shopping experience. This versatile display transforms any showroom into a modern, efficient space, balancing form and function.

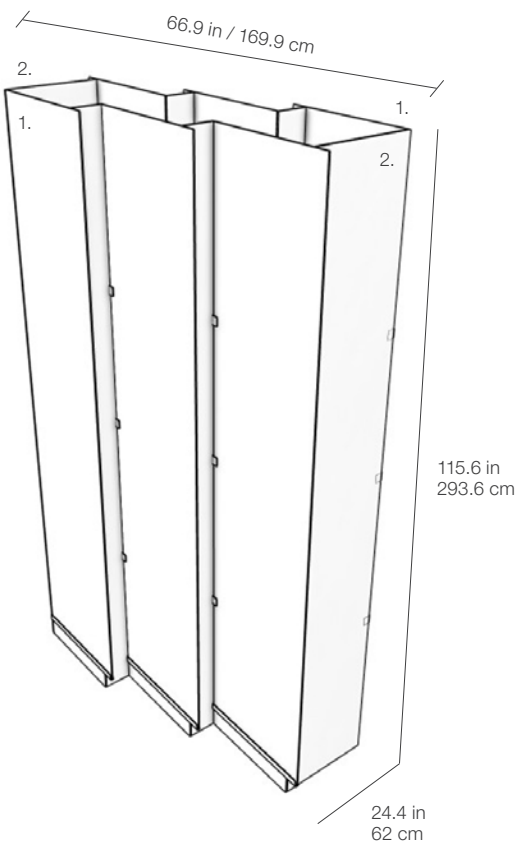

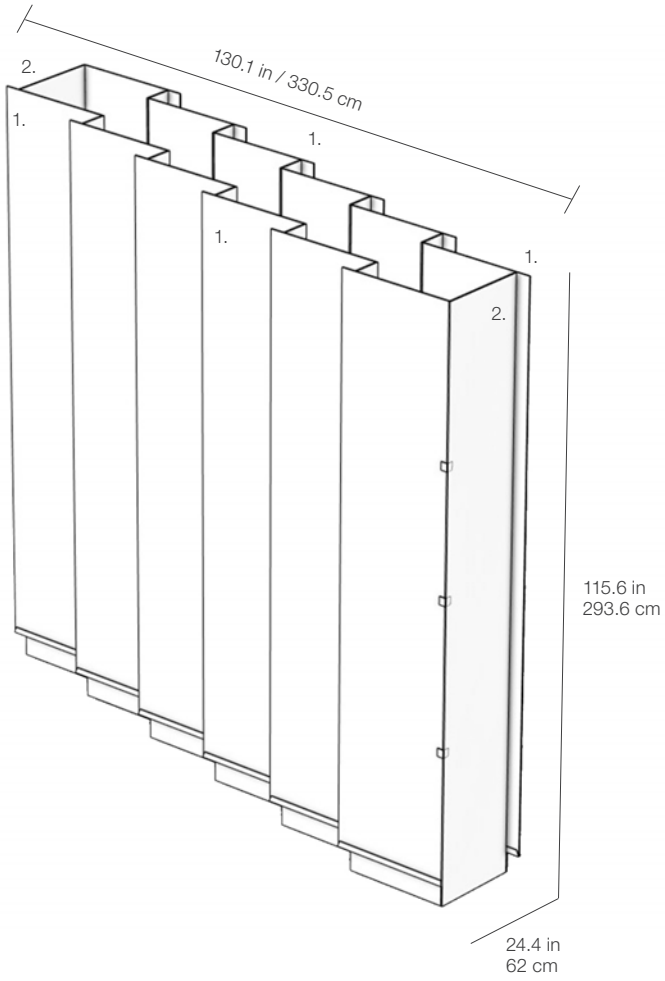

Waterfall Display 6 Piece Set Configuration
1. Waterfall Slab Display Kit (2 Kits in total)
2. Waterfall Slab Display Connectors (2 in total)
3. Waterfall Slab Display Wooden Side Cover (6 in total)

Waterfall Display 12 Piece Set Configuration
1. Waterfall Slab Display Kit (4 Kits in total)
2. Waterfall Slab Display Connectors (2 in total)
3. Waterfall Slab Display Wooden Side Cover (12 in total)

6-PIECE CENTRAL ISLAND CONFIGURATION	TOTAL #	12-PIECE CENTRAL ISLAND CONFIGURATION	TOTAL #
Waterfall Slab Display Kit	2	Waterfall Slab Display Kit	4
Waterfall Slab Display Connectors	1	Waterfall Slab Display Connectors	2
60 X 280 cm Sample (Included with each 6 mm sample: pre-affixed Plexiglass Label Holder with Sample Label and Sample Chips in all other available finishes for that color)	6	60 X 280 cm Sample (Included with each 6 mm sample: pre-affixed Plexiglass Label Holder with Sample Label and Sample Chips in all other available finishes for that color)	12

*For central island configurations, floor mounting is required. Please work with a professional contractor and follow local building codes for safe construction practices.
**Labels can be ordered using the generic item code above. Please specify the required colors and finishes when placing the order through your Anatolia Business Development Manager.

Waterfall Display Sample Pieces

Display Sample Cut Pieces	ITEM CODE
Anatolia 60 x 280 cm Arabescato Corchia Polished Sample, 6mm	9902-2727-0
Anatolia 60 x 280 cm Arabescato Corchia Honed Sample, 6mm	9902-2728-0
Anatolia 60 x 280 cm Statuario Block 16 Polished Display Slab, 6mm	9902-2729-0
Anatolia 60 x 280 cm Statuario Block 16 Honed Display Slab, 6mm	9902-2730-0
Anatolia 60 x 280 cm Bianco Gioia Polished Sample, 6mm	9902-2731-0
Anatolia 60 x 280 cm Bianco Gioia Honed Sample, 6mm	9902-2732-0
Anatolia 60 x 280 cm Calacatta Corchia Polished Sample, 6mm	9902-2733-0
Anatolia 60 x 280 cm Calacatta Corchia Honed Sample, 6mm	9902-2734-0
Anatolia 60 x 280 cm Ariel Bianco Polished Sample, 6mm	9902-2735-0
Anatolia 60 x 280 cm Ariel Bianco Honed Sample, 6mm	9902-2736-0
Anatolia 60 x 280 cm Calacatta Oro Polished Sample, 6mm	9902-2737-0
Anatolia 60 x 280 cm Calacatta Oro Honed Sample, 6mm	9902-2738-0
Anatolia 60 x 280 cm Calacatta Cremo Polished Sample, 6mm	9902-2739-0
Anatolia 60 x 280 cm Calacatta Cremo Honed Sample, 6mm	9902-2740-0
Anatolia 60 x 280 cm Bianco Stratura Polished Sample, 6mm	9902-2741-0
Anatolia 60 x 280 cm Bianco Stratura Honed Sample, 6mm	9902-2742-0
Anatolia 60 x 280 cm Gemma Bronze Polished Sample, 6mm	9902-2743-0
Anatolia 60 x 280 cm Gemma Bronze Honed Sample, 6mm	9902-2744-0
Anatolia 60 x 280 cm Calacatta Borghini Polished Sample, 6mm	9902-2745-0
Anatolia 60 x 280 cm Calacatta Borghini Honed Sample, 6mm	9902-2746-0
Anatolia 60 x 280 cm Taj Mahal Polished Sample, 6mm	9902-2747-0
Anatolia 60 x 280 cm Taj Mahal Honed Sample, 6mm	9902-2748-0
Anatolia 60 x 280 cm French Vanilla Polished Sample, 6mm	9902-2749-0
Anatolia 60 x 280 cm French Vanilla Honed Sample, 6mm	9902-2750-0
Anatolia 60 x 280 cm Forge Eleganza Polished Sample, 6mm	9902-2751-0
Anatolia 60 x 280 cm Forge Eleganza Honed Sample, 6mm	9902-2752-0
Anatolia 60 x 280 cm Atlantic Ocean Polished Sample, 6mm	9902-2753-0
Anatolia 60 x 280 cm Atlantic Ocean Honed Sample, 6mm	9902-2754-0
Anatolia 60 x 280 cm Verdi Alpi Polished Sample, 6mm	9902-2755-0

Display Sample Cut Pieces	ITEM CODE
Anatolia 60 x 280 cm Verdi Alpi Honed Sample, 6mm	9902-2756-0
Anatolia 60 x 280 cm Foresta Polished Sample, 6mm	9902-2757-0
Anatolia 60 x 280 cm Foresta Honed Sample, 6mm	9902-2758-0
Anatolia 60 x 280 cm Macchia Vecchia Polished Sample, 6mm	9902-2759-0
Anatolia 60 x 280 cm Macchia Vecchia Honed Sample, 6mm	9902-2760-0
Anatolia 60 x 280 cm Oro Noir Polished Sample, 6mm	9902-2761-0
Anatolia 60 x 280 cm Oro Noir Honed Sample, 6mm	9902-2762-0
Anatolia 60 x 280 cm Bianco Dior Polished Sample, 6mm	9902-2763-0
Anatolia 60 x 280 cm Bianco Dior Honed Sample, 6mm	9902-2764-0
Anatolia 60 x 280 cm Sahara Noir Polished Sample, 6mm	9902-2765-0
Anatolia 60 x 280 cm Sahara Noir Honed Sample, 6mm	9902-2766-0
Anatolia 60 x 280 cm Calacatta Noir Polished Sample, 6mm	9902-2767-0
Anatolia 60 x 280 cm Calacatta Noir Honed Sample, 6mm	9902-2768-0
Anatolia 60 x 280 cm Travertino Classico Honed Sample, 6mm	9902-2769-0
Anatolia 60 x 280 cm Travertino Titanium Honed Sample, 6mm	9902-2770-0
Anatolia 60 x 280 cm Crystal Bianco Polished Sample, 6mm	9902-2771-0
Anatolia 60 x 280 cm Crystal Bianco Honed Sample, 6mm	9902-2772-0
Anatolia 60 x 280 cm Ceppo di Gre Honed Sample, 6mm	9902-2773-0
Anatolia 60 x 280 cm Serena Flint Honed Sample, 6mm	9902-2782-0
Anatolia 60 x 280 cm Serena Flint Organic Matte Sample, 6mm	9902-2783-0
Anatolia 60 x 280 cm Serena Crater Honed Sample, 6mm	9902-2784-0
Anatolia 60 x 280 cm Serena Crater Organic Matte Sample, 6mm	9902-2785-0
Anatolia 60 x 280 cm Serena Shale Honed Sample, 6mm	9902-2786-0
Anatolia 60 x 280 cm Serena Shale Organic Matte Sample, 6mm	9902-2787-0
Anatolia 60 x 280 cm Serena Pewter Honed Sample, 6mm	9902-2788-0
Anatolia 60 x 280 cm Serena Pewter Organic Matte Sample, 6mm	9902-2789-0
Anatolia 60 x 280 cm Serena Dusk Honed Sample, 6mm	9902-2790-0
Anatolia 60 x 280 cm Serena Dusk Organic Matte Sample, 6mm	9902-2791-0
Anatolia 60 x 280 cm Serena Valley Honed Sample, 6mm	9902-2792-0

Waterfall Display Sample Pieces

Display Sample Cut Pieces	ITEM CODE
Anatolia 60 x 280 cm Serena Valley Organic Matte Sample, 6mm	9902-2793-0
Anatolia 60 x 280 cm Lithoform Dunes - Crosscut Honed Sample, 6mm	9902-2794-0
Anatolia 60 x 280 cm Lithoform Dunes - Crosscut Organic Matte Sample, 6mm	9902-2795-0
Anatolia 60 x 280 cm Lithoform Coast - Crosscut Honed Sample, 6mm	9902-2796-0
Anatolia 60 x 280 cm Lithoform Coast - Crosscut Organic Matte Sample, 6mm	9902-2797-0
Anatolia 60 x 280 cm Lithoform Vista - Crosscut Honed Sample, 6mm	9902-2798-0
Anatolia 60 x 280 cm Lithoform Vista - Crosscut Organic Matte Sample, 6mm	9902-2799-0
Anatolia 60 x 280 cm Lithoform Twilight - Crosscut Honed Sample, 6mm	9902-2800-0
Anatolia 60 x 280 cm Lithoform Twilight - Crosscut Organic Matte Sample, 6mm	9902-2801-0
Anatolia 60 x 280 cm Lithoform Dunes - Veincut Honed Sample, 6mm	9902-2802-0
Anatolia 60 x 280 cm Lithoform Dunes - Veincut Organic Matte Sample, 6mm	9902-2803-0
Anatolia 60 x 280 cm Lithoform Coast - Veincut Honed Sample, 6mm	9902-2804-0
Anatolia 60 x 280 cm Lithoform Coast - Veincut Organic Matte Sample, 6mm	9902-2805-0
Anatolia 60 x 280 cm Lithoform Vista - Veincut Honed Sample, 6mm	9902-2806-0
Anatolia 60 x 280 cm Lithoform Vista - Veincut Organic Matte Sample, 6mm	9902-2807-0
Anatolia 60 x 280 cm Lithoform Twilight - Veincut Honed Sample, 6mm	9902-2808-0
Anatolia 60 x 280 cm Lithoform Twilight - Veincut Organic Matte Sample, 6mm	9902-2809-0
Anatolia 60 x 280 cm Monoforma Moonlight Honed Sample, 6mm	9902-2811-0
Anatolia 60 x 280 cm Monoforma Moonlight Silk Sample, 6mm	9902-2812-0
Anatolia 60 x 280 cm Monoforma Oasis Silk Sample, 6mm	9902-2814-0
Anatolia 60 x 280 cm Monoforma Storm Silk Sample, 6mm	9902-2816-0
Anatolia 60 x 280 cm Monoforma Silhouette Silk Sample, 6mm	9902-2818-0
Anatolia 60 x 280 cm Arabescato Vagli Polished Sample, 6mm	9902-2819-0
Anatolia 60 x 280 cm Arabescato Vagli Honed Sample, 6mm	9902-2820-0
Anatolia 60 x 280 cm Montagna Grey Polished Sample, 6mm	9902-2821-0
Anatolia 60 x 280 cm Montagna Grey Honed Sample, 6mm	9902-2822-0
Anatolia 60 x 280 cm Calacatta Carrara Polished Sample, 6mm	9902-2823-0
Anatolia 60 x 280 cm Calacatta Carrara Honed Sample, 6mm	9902-2824-0
Anatolia 60 x 280 cm Panda Polished Sample, 6mm	9902-2825-0
Anatolia 60 x 280 cm Panda Honed Sample, 6mm	9902-2826-0

Display Sample Cut Pieces	ITEM CODE
Anatolia 60 x 280 cm Colorado Lincoln Polished Sample, 6mm	9902-2827-0
Anatolia 60 x 280 cm Colorado Lincoln Honed Sample, 6mm	9902-2828-0
Anatolia 60 x 280 cm Fusion White Polished Sample, 6mm	9902-2829-0
Anatolia 60 x 280 cm Fusion White Honed Sample, 6mm	9902-2831-0
Anatolia 60 x 280 cm Calacatta Picasso Polished Sample, 6mm	9902-2831-0
Anatolia 60 x 280 cm Calacatta Picasso Honed Sample, 6mm	9902-2832-0
Anatolia 60 x 280 cm Calacatta Viola Polished Sample, 6mm	9902-2833-0
Anatolia 60 x 280 cm Calacatta Viola Honed Sample, 6mm	9902-2834-0
Anatolia 60 x 280 cm Cristallo Polished Sample, 6mm	9902-2835-0
Anatolia 60 x 280 cm Cristallo Honed Sample, 6mm	9902-2836-0
Anatolia 60 x 280 cm Marina White Polished Sample, 6mm	9902-2837-0
Anatolia 60 x 280 cm Marina White Honed Sample, 6mm	9902-2838-0
Anatolia 60 x 280 cm Super White Polished Sample, 6mm	9902-2839-0
Anatolia 60 x 280 cm Super White Honed Sample, 6mm	9902-2840-0
Anatolia 60 x 280 cm Grigio Quarzo Honed Sample, 6mm	9902-2841-0
Anatolia 60 x 280 cm Montagna Jade Polished Sample, 6mm	9902-2842-0
Anatolia 60 x 280 cm Montagna Jade Honed Sample, 6mm	9902-2843-0
Anatolia 60 x 280 cm Pietra Imperiale Polished Sample, 6mm	9902-2844-0
Anatolia 60 x 280 cm Pietra Imperiale Honed Sample, 6mm	9902-2845-0
Anatolia 60 x 280 cm Armani Noir Polished Sample, 6mm	9902-2846-0
Anatolia 60 x 280 cm Armani Noir Honed Sample, 6mm	9902-2847-0
Anatolia 60 x 280 cm Nero Marquina Polished Sample, 6mm	9902-2848-0
Anatolia 60 x 280 cm Nero Marquina Honed Sample, 6mm	9902-2849-0
Anatolia 60 x 280 cm Tuscano Burgundy Polished Sample	9902-3706-0
Anatolia 60 x 280 cm Publica Thunder Organic Matte Sample, 6mm	9902-2850-0
Anatolia 60 x 280 cm Publica Thunder Patinated Sample, 6mm	9902-2851-0
Anatolia 60 x 280 cm Publica Horizon Organic Matte Sample, 6mm	9902-2852-0
Anatolia 60 x 280 cm Publica Horizon Patinated Sample, 6mm	9902-2853-0
Anatolia 60 x 280 cm Publica Terrain Organic Matte Sample, 6mm	9902-2854-0
Anatolia 60 x 280 cm Publica Terrain Patinated Sample, 6mm	9902-2855-0

Waterfall Display Sample Pieces

Display Sample Cut Pieces	ITEM CODE
Anatolia 60 x 280 cm Travertino Classico Grained Display Slab, 6mm	9902-3014-0
Anatolia 60 x 280 cm Travertino Classico Organic Matte Display Slab, 6mm	9902-3015-0
Anatolia 60 x 280 cm Travertino Titanium Grained Display Slab, 6mm	9902-3016-0
Anatolia 60 x 280 cm Travertino Titanium Organic Matte Display Slab, 6mm	9902-3017-0
Anatolia 60 x 280 cm Statuario Block 17 Honed Display Slab, 6mm	9902-3018-0
Anatolia 60 x 280 cm Statuario Block 17 Polished Display Slab, 6mm	9902-3019-0
Anatolia 60 x 280 cm Serena Pewter Honed Display Slab, 6mm	9902-3020-0
Anatolia 60 x 280 cm Serena Pewter Organic Matte Display Slab, 6mm	9902-3021-0
Anatolia 60 x 280 cm Serena Dusk Honed Display Slab, 6mm	9902-3022-0
Anatolia 60 x 280 cm Serena Dusk Organic Matte Display Slab, 6mm	9902-3023-0
Anatolia 60 x 280 cm Serena Valley Honed Display Slab, 6mm	9902-3024-0
Anatolia 60 x 280 cm Serena Valley Organic Matte Display Slab, 6mm	9902-3025-0
Anatolia 60 x 280 cm Lustra Onyx Crema Honed Display Slab, 6mm	9902-3026-0
Anatolia 60 x 280 cm Lustra Onyx Crema Polished Display Slab, 6mm	9902-3027-0
Anatolia 60 x 280 cm Lustra Onyx Sage Honed Display Slab, 6mm	9902-3028-0
Anatolia 60 x 280 cm Lustra Onyx Sage Polished Display Slab, 6mm	9902-3029-0
Anatolia 60 x 280 cm Lustra Onyx Hazel Honed Display Slab, 6mm	9902-3030-0
Anatolia 60 x 280 cm Lustra Onyx Hazel Polished Display Slab, 6mm	9902-3031-0
Anatolia 60 x 280 cm Architeq Micro Smoke Honed Sample	9902-3684-0
Anatolia 60 x 280 cm Architeq Micro Mist Honed Sample	9902-3683-0
Anatolia 60 x 280 cm Architeq Micro Bone Honed Sample	9902-3682-0
Anatolia 60 x 280 cm Architeq Micro Sand Honed Sample	9902-3681-0
Anatolia 60 x 280 cm Architeq Micro Clay Honed Sample	9902-3680-0
Anatolia 60 x 280 cm Architeq Micro Earth Honed Sample	9902-3679-0

Showroom Single Panel Display

SIZES AT A GLANCE
63 x 126 in / 160 x 320 cm in 6mm Anatolia Sintered Slab

Unveil the full beauty of each Anatolia sintered slab with the Single Panel Display. This versatile design allows you to showcase each 6 mm slab sample in a variety of stunning configurations. Feature a single panel for a dramatic spotlight effect, or position two panels side-by-side for a seamless true-to-nature bookmatch feature that highlights the stone's inherent pattern from one slab to another. Single Panel Displays may be presented as a standalone feature or combined with a second kit to create a striking double-sided display. For an even more dynamic presentation, arrange multiple panels to create limitless design possibilities, transforming your space into a visual masterpiece. Elevate your showroom experience with a display that not only highlights the elegance of Anatolia sintered slabs, but also offers endless flexibility to suit any vision.

A key benefit is that it features a non-fixed system, this display enables you to effortlessly switch out slab selections with ease. Its adaptable design revolutionizes the way you present and highlight Anatolia sintered slab products.



Showroom Single Panel Display at a glance



Showroom Single Panel Displays

Showroom Single Panel Display



Single Panel Display (Double Sided)

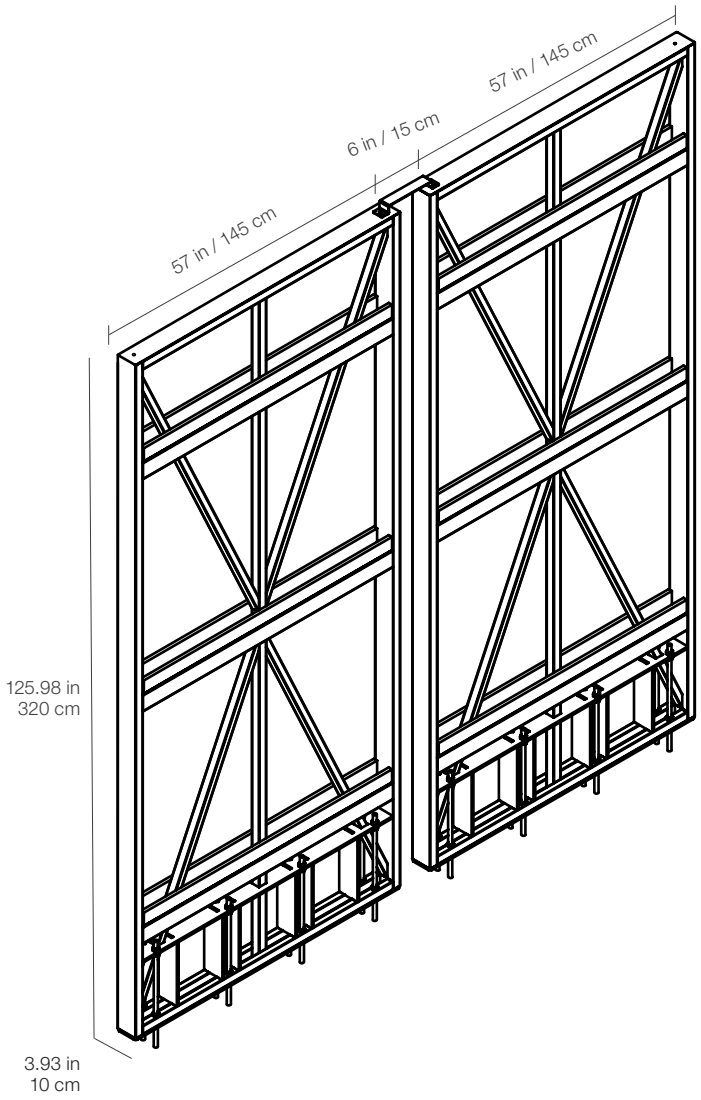

Frame structure spacing between two panels for side-by-side installation

ITEM DESCRIPTION	ITEM CODE	UPC
Single Panel Display Fixture	9902-3333-0	828492098462
ADDITIONAL COMPONENT		
28 x 6 x 3/4 in Slab Display MDF Cleats - Set of 3	9902-3341-0	828492099490
Anatolia Logo & Plexiglass Label Holder Kit - 1 PC	9901-0088-0	828492099506
9.5 x 13.4 cm Sample Label – 1 PC	9902-3340-0	828492099483

*For single panel display, floor mounting is required. Please work with a professional contractor and follow local building codes for safe construction practices.

*Sample, Sample Chip and Label orders are coordinated through your Business Development Manager. Two logos and Plexi Kits are required for each Single Panel Display, as each display has a front and back. Sample Chips are designed for installation directly beneath plexiglass to showcase all available finishes.

Showroom Cubicle Display Panels

CONFIGURATIONS AT A GLANCE
A (5 Wall and 3 Floor Panels)
B (6 Wall and 3 Floor Panels)
C (6 Wall and 3 Floor Panels)
D (5 Wall, 3 Floor and 20 Sliding Panels)

The innovative Cubicle Display Panels showcase installed Anatolia sintered slabs on walls and floors in a room scene inspired setup. A selection of premium colours and finishes may be chosen to immerse viewers in the ambiance of these curated spaces. A key benefit is that it features a non-fixed system, this display enables you to effortlessly switch out slab selections with ease. Its adaptable design revolutionizes the way you present and highlight Anatolia sintered slab products.

This dynamic showroom experience comes in 4 different configurations, allowing customers to explore and appreciate the beauty of sintered slabs in a realistic setting. The lighting within these cubicles is thoughtfully integrated, enhancing the visual appeal of the displayed slabs.



Cubicle Display Panels Configurations

The 4 different Cubicle Display Panel configurations come with a variety of sections that can suit your showroom needs. Each one can be fully customizable, its non-fixed system enables you to effortlessly switch out slab selections with ease, revolutionizing the way you present and highlight Anatolia sintered slab products. Select each sample by color, thickness and finish for each section to create the perfect immersive experience.



Showroom Cubicle Display Panels

Showroom Cubicle Display Panels - A (3 Sections)

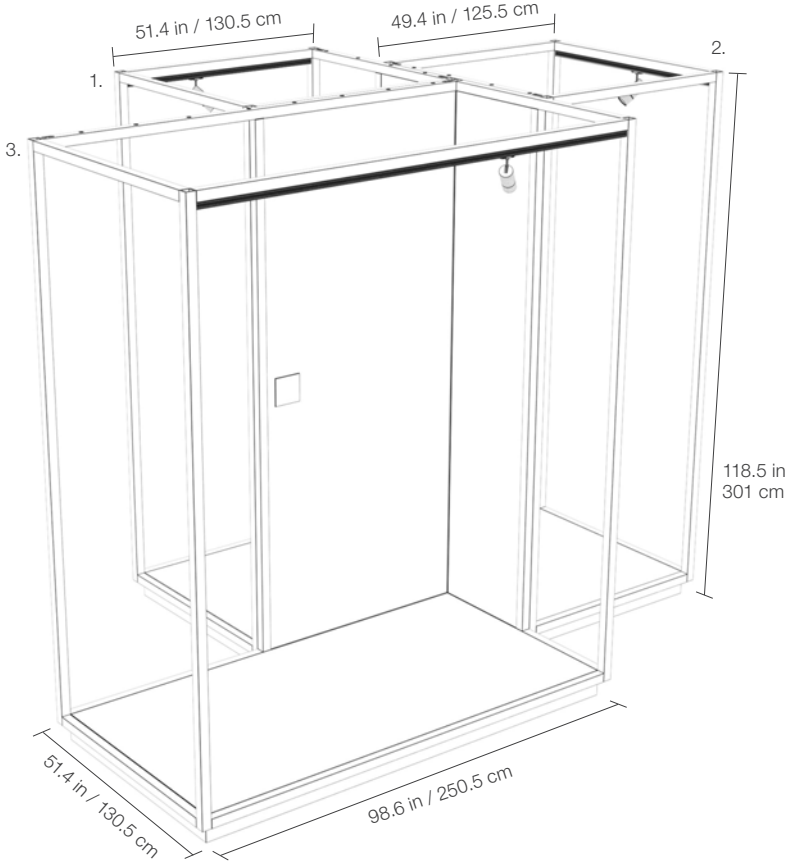



Cubicle Display Panels - A (3 Sections)

	WALL		FLOOR	
	# OF PANELS	PANEL SIZE	# OF PANELS	PANEL SIZE
SECTION 1	2	120 x 280 cm 57.5 x 280 cm	1	120 x 120 cm
SECTION 2	1	120 x 280 cm	1	120 x 120 cm
SECTION 3	2	120 x 280 cm 57.5 x 280 cm	1	240 x 120 cm

Showroom Cubicle Display Panels - B & C (3 Sections)

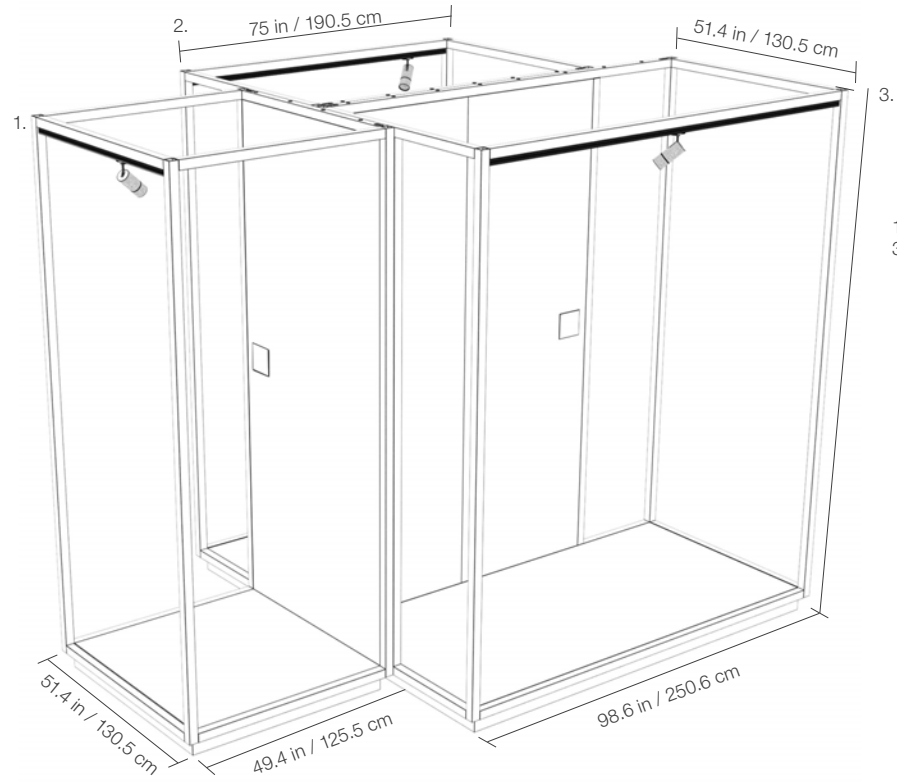

Cubicle Display Panels - B (3 Sections)

	WALL		FLOOR	
	# OF PANELS	PANEL SIZE	# OF PANELS	PANEL SIZE
SECTION 1	1	120 x 280 cm	1	120 x 120 cm
SECTION 2	3	90 x 280 cm x 2 57.5 x 280 cm	1	180 x 120 cm
SECTION 3	2	90 x 280 cm x 2 57.5 x 280 cm	1	240 x 120 cm

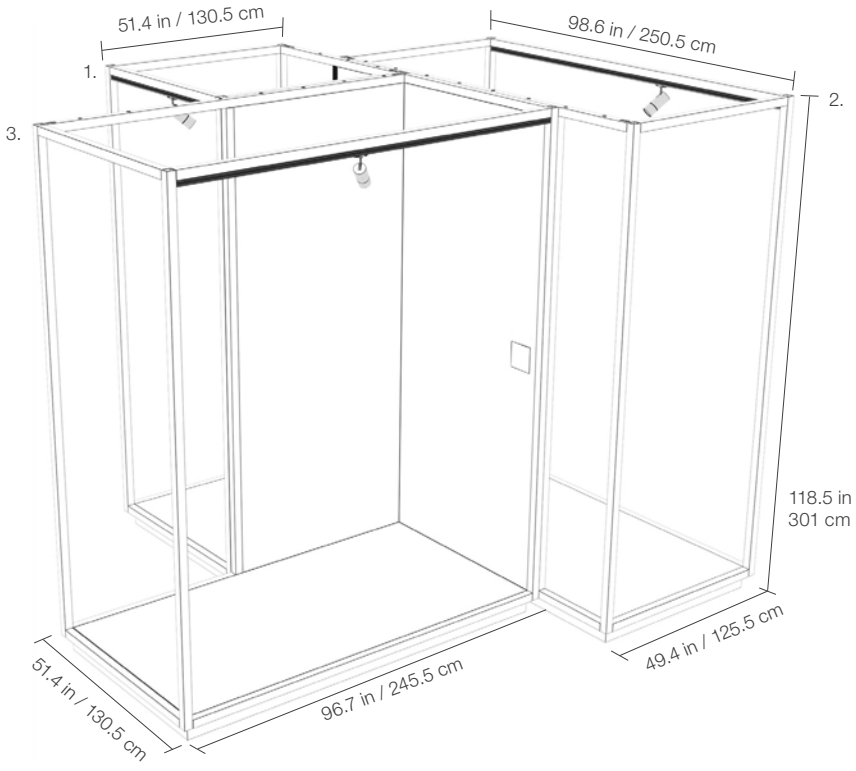

Cubicle Display Panels - C (3 Sections)

	WALL		FLOOR	
	# OF PANELS	PANEL SIZE	# OF PANELS	PANEL SIZE
SECTION 1	2	120 x 280 cm 60 x 280 cm	1	120 x 120 cm
SECTION 2	2	92.5 x 280 cm	1	240 x 120 cm
SECTION 3	2	120 x 280 cm	1	240 x 120 cm

Showroom Cubicle Display Panels - D (3 Sections + Sliding Panels)

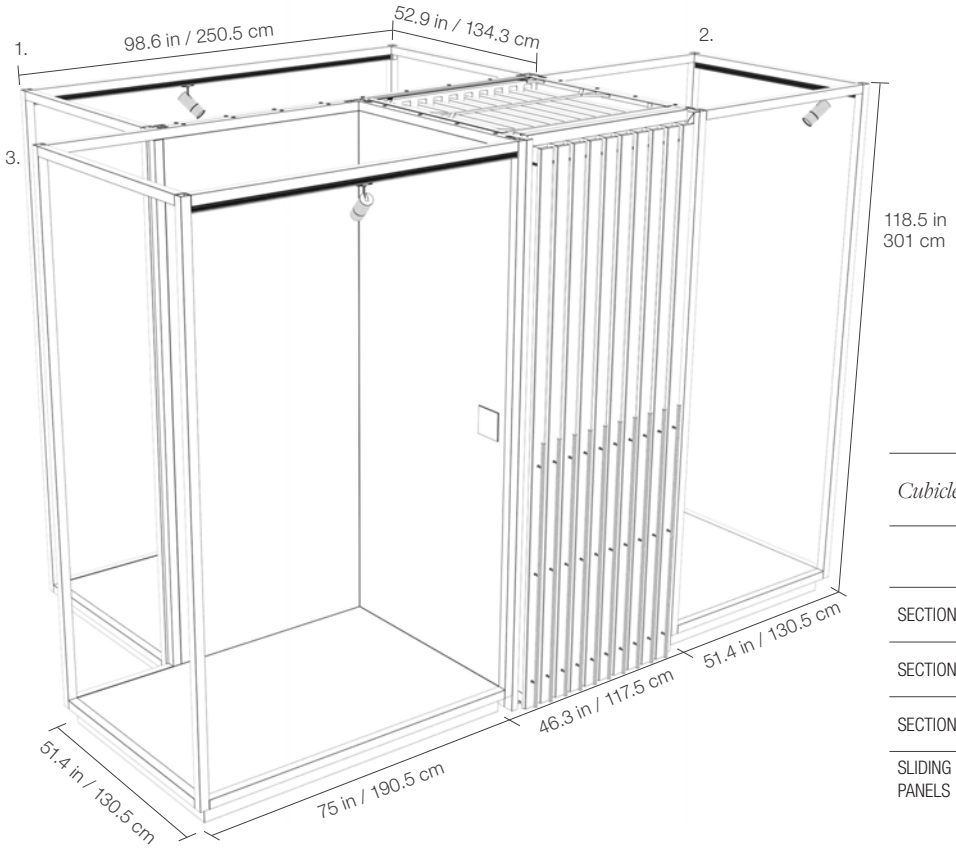

Cubicle Display Panels - D (3 Sections + Sliding Panels)

	WALL		FLOOR	
	# OF PANELS	PANEL SIZE	# OF PANELS	PANEL SIZE
SECTION 1	2 (Recommended for bookmatch)	120 x 280 cm	1	240 x 120 cm
SECTION 2	1	120 x 280 cm	1	120 x 120 cm
SECTION 3	2	120 x 280 cm 118 x 280 cm	1	180 x 120 cm
SLIDING PANELS	20	120 x 280 cm	N/A	N/A

Cubicle Required Components

Showroom Fixture Light (3 in total)	9902-1654-0	828492074794
Showroom Fixture Light Track, 6 FT (3 in total)	9902-1655-0	828492074800
Showroom Fixture Light End Feed (1 piece in total)	9902-1656-0	828492074817
ADDITIONAL COMPONENT		
Anatolia Logo & Plexiglass Label Holder Kit - 1 PC	9901-0088-0	828492099506
9.5 x 13.4 cm Sample Label – 1 PC	9902-3340-0	828492099483

*Labels can be ordered using the code above. Please specify the required colors and finishes when placing the order through your Anatolia Business Development Manager.

Sliding Panel Display - Up to 12 PC

SIZES AT A GLANCE
Right Angle Sliding 63 x 126 in / 160 x 320 cm Sintered Slab Display (12 PC)
Left Angle Sliding 63 x 126 in / 160 x 320 cm Sintered Slab Display (12 PC)
Right Angle Sliding 48 x 110 in / 120 x 280 cm Porcelain Slab Display (12 PC)
Left Angle Sliding 48 x 110 in / 120 x 280 cm Porcelain Slab Display (12 PC)
Straight Sliding 48 x 110 in / 120 x 280 cm Porcelain Slab Display (10 PC)

The Sliding Panel Displays offer a clean and streamlined solution for showcasing 160 x 320 cm Sintered Slabs and 120 x 280 cm Porcelain Slabs. Each individual panel presents a single full slab, allowing customers to appreciate the scale, detail and finish of each surface without interruption. The 120 x 280 cm display is also compatible with the MDF Dealer Showroom Boards, offering an elegant way to showcase Anatolia's tile collections.

This display system is available in both right-angle and left-angle sliding configurations, making it adaptable to your showroom layout. Its intuitive sliding mechanism ensures smooth operation, making it easy for customers and designers alike to browse the collection.

With its minimalist design and practical functionality, the Sliding Panel Display provides an elegant, space-efficient way to showcase the full beauty of Anatolia's collections.

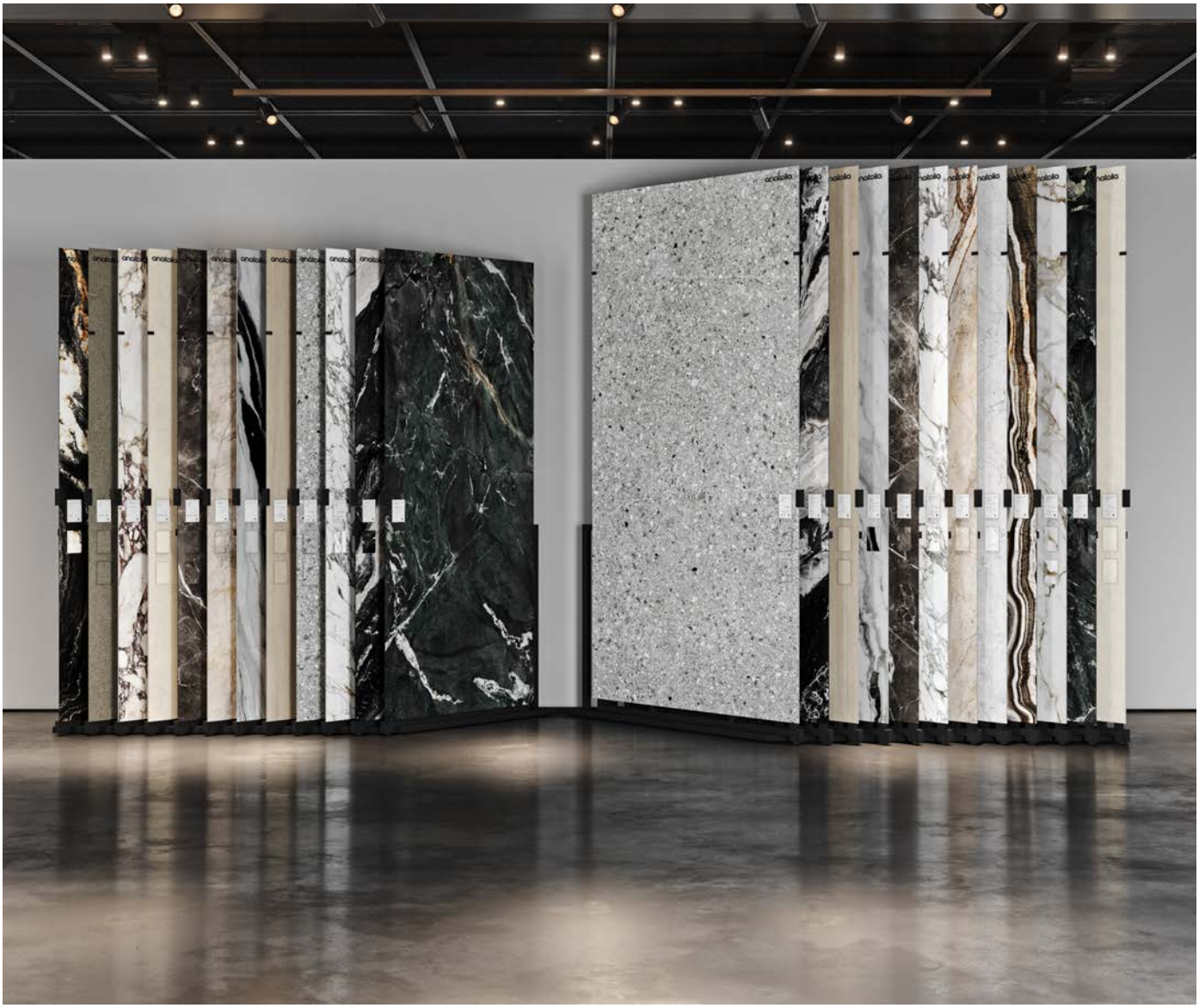

On the left: 48 x 110 in / 120 x 280 cm Left Angle Sliding Slabs Display. On the right: 63 x 126 in / 160 x 320 cm Right Angle Sliding Slabs Display

Sliding Panel Display - Up to 12 PC at a glance



On the left: 48 x 110 in / 120 x 280 cm Left Angle Sliding Slab / Display Board Display. In the middle: 48 x 110 in / 120 x 280 cm Straight Sliding Slab / Display Board Display.
On the right: 48 x 110 in / 120 x 280 cm Right Angle Sliding Slab / Display Board Display.

Sliding Panel Display - 12 PC

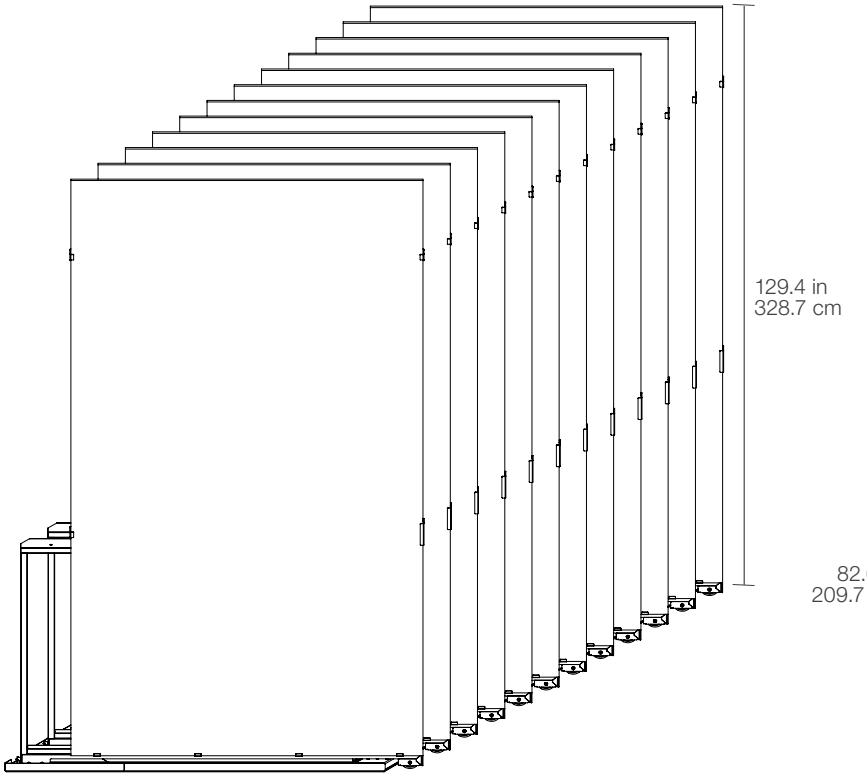

63 x 126 in / 160 x 320 cm Sliding Sintered Slab Display front view

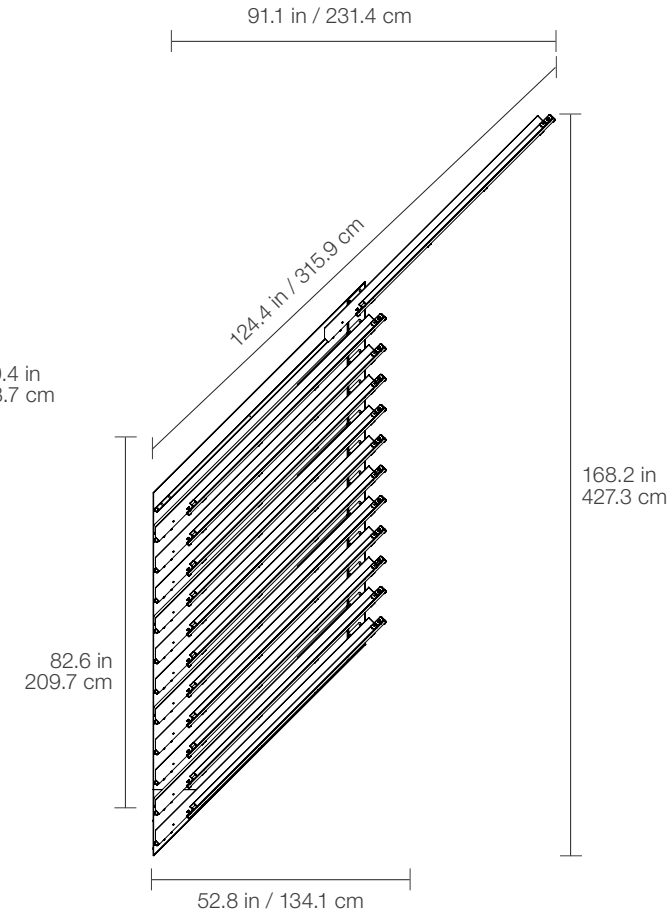

63 x 126 in / 160 x 320 cm Sliding Sintered Slab Display top view

ITEM DESCRIPTION	ITEM CODE	UPC
Right Angle Sliding 160 x 320 cm Slab Display - 12 Slab Capacity	9902-3102-0	828492096055
Left Angle Sliding 160 x 320 cm Slab Display - 12 Slab Capacity	9902-3103-0	828492096062
ADDITIONAL COMPONENT		
Anatolia Logo & Plexiglass Label Holder Kit - 1 PC	9901-0088-0	828492099506
9.5 x 13.4 cm Sample Label – 1 PC	9902-3340-0	828492099483

For the initial installation, your Anatolia Interior Design team will advise exactly on what is required for a successful initial setup. Slab, label and sample chip orders are coordinated through your Anatolia Business Development Manager, please specify the required colors and finishes when placing your order. The Sample Chips are designed to be installed directly beneath plexiglass to showcase all available finishes. Fixture replacement codes are listed above.

Sliding Panel Display - 12 PC

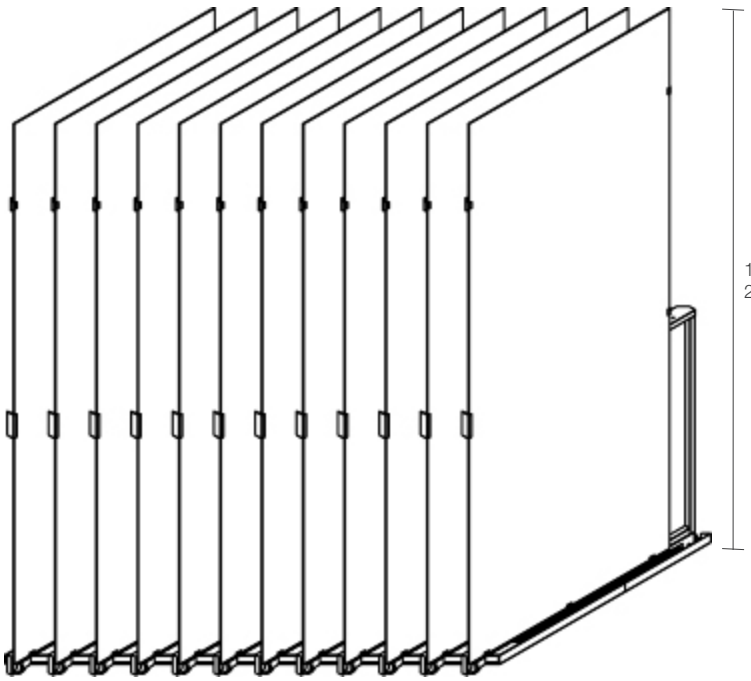

48 x 110 in / 120 x 280 cm Sliding Slab / Display Board Display front view

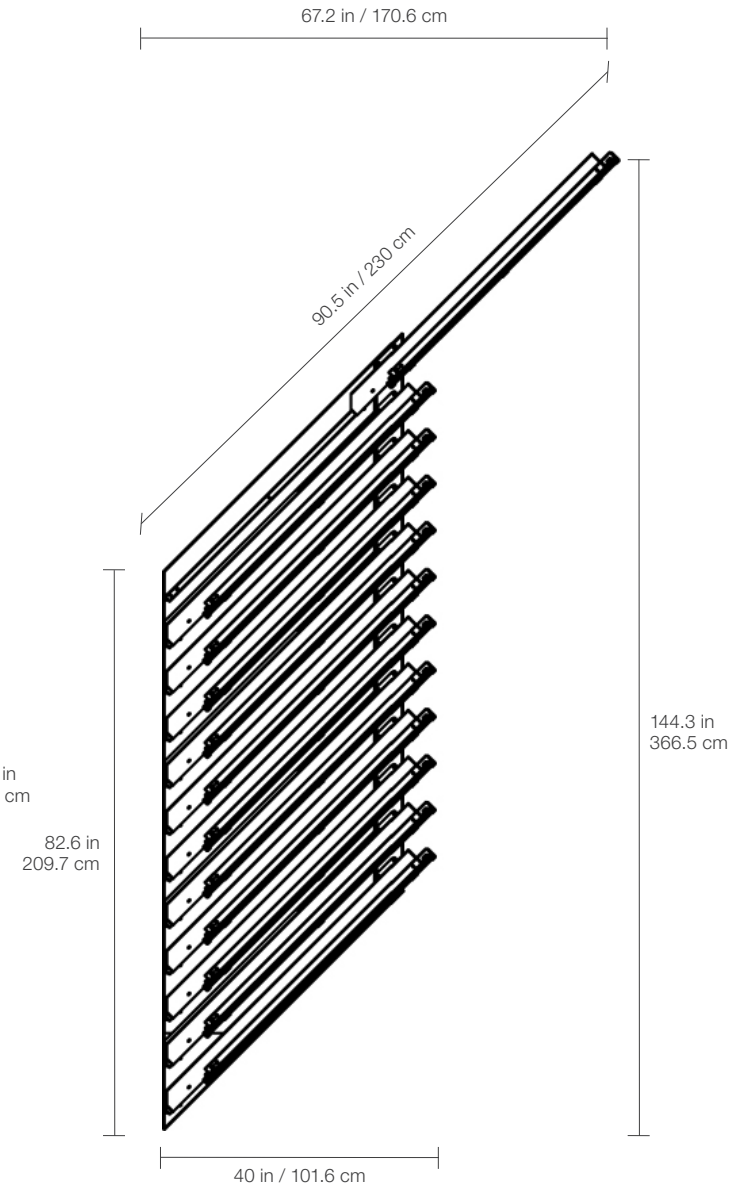

48 x 110 in / 120 x 280 cm Sliding Slab / Display Board Display top view

ITEM DESCRIPTION	ITEM CODE	UPC
Right Angle Sliding 120 x 280 Slab / Display Board - 12 pcs Capacity	9902-3098-0	828492096024
Left Angle Sliding 120 x 280 Slab / Display Board - 12 pcs Capacity	9902-3099-0	828492096031
ADDITIONAL COMPONENT		
Anatolia Logo & Plexiglass Label Holder Kit - 1 PC	9901-0088-0	828492099506
9.5 x 13.4 cm Sample Label – 1 PC	9902-3340-0	828492099483

For the initial installation, your Anatolia Interior Design team will advise exactly on what is required for a successful initial setup. Slab, label and sample chip orders are coordinated through your Anatolia Business Development Manager, please specify the required colors and finishes when placing your order. The Sample Chips are designed to be installed directly beneath plexiglass to showcase all available finishes. Fixture replacement codes are listed above.

Straight Sliding Panel Display - 10 PC



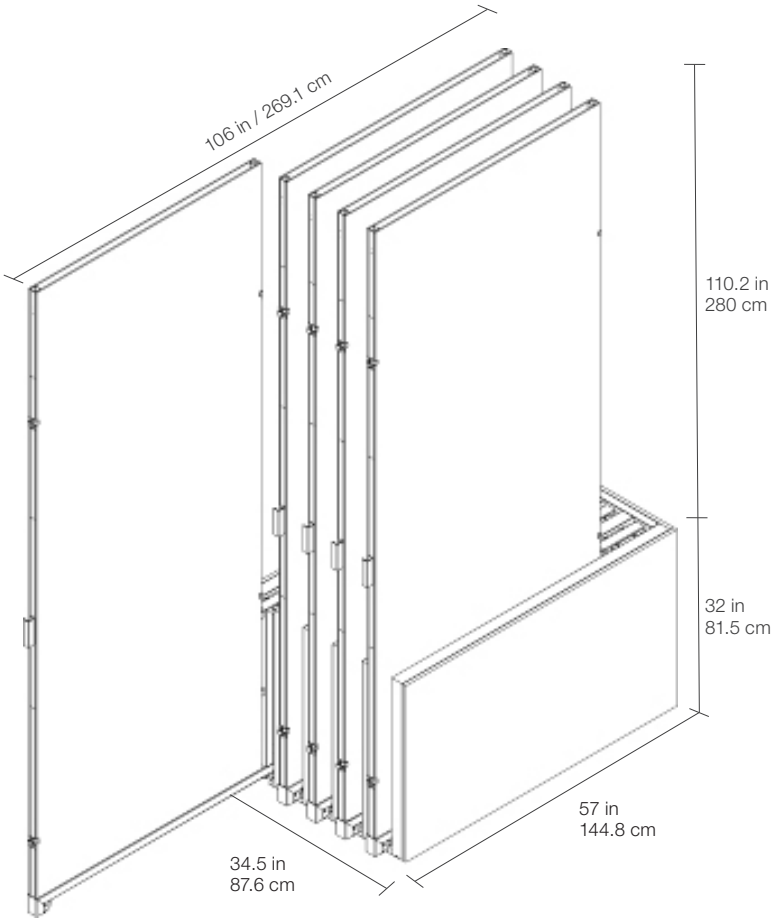

ITEM DESCRIPTION	ITEM CODE	UPC
Straight Angle Sliding 120 x 280 Slab / Display Board - 10 pcs Capacity	9902-3101-0	828492096048
ADDITIONAL COMPONENT		
Anatolia Logo & Plexiglass Label Holder Kit - 1 PC	9901-0088-0	828492099506
9.5 x 13.4 cm Sample Label – 1 PC	9902-3340-0	828492099483

For the initial installation, your Anatolia Interior Design team will advise exactly on what is required for a successful initial setup. Slab, label and sample chip orders are coordinated through your Anatolia Business Development Manager, please specify the required colors and finishes when placing your order. The Sample Chips are designed to be installed directly beneath plexiglass to showcase all available finishes. Fixture replacement codes are listed above.

Rotating Tile Floor Display - 10 PC

SIZES AT A GLANCE
Compatible with tile formats between 8-10 cm thick:
48 x 48 in / 120 x 120 cm
36 x 36 in / 90 x 90 cm
36 x 72 in / 90 x 180 cm
24 x 48 in / 60 x 120 cm

The Rotating Tile Floor Display provides a dynamic and engaging way to showcase Anatolia's porcelain surfaces in large-format sizes. Designed for practicality and impact, this system accommodates a range of tile formats and thicknesses, offering flexibility to showcase multiple product sizes within a single cohesive display.

Each panel smoothly slides out and rotates upward, positioning the surface horizontally for closer inspection. This interactive mechanism allows customers and designers to experience the details, finishes, and craftsmanship of each tile with ease. Every rotating section is double-sided, featuring two different tile colors per panel, maximizing the variety displayed within a compact footprint.

With its functional design and efficient use of space, the Rotating Tile Floor Display delivers an elegant showroom solution for presenting large-format tiles in an accessible and impactful way.



Rotating Tile Floor Display - 10 PC

48 x 48 in | 120 x 120 cm



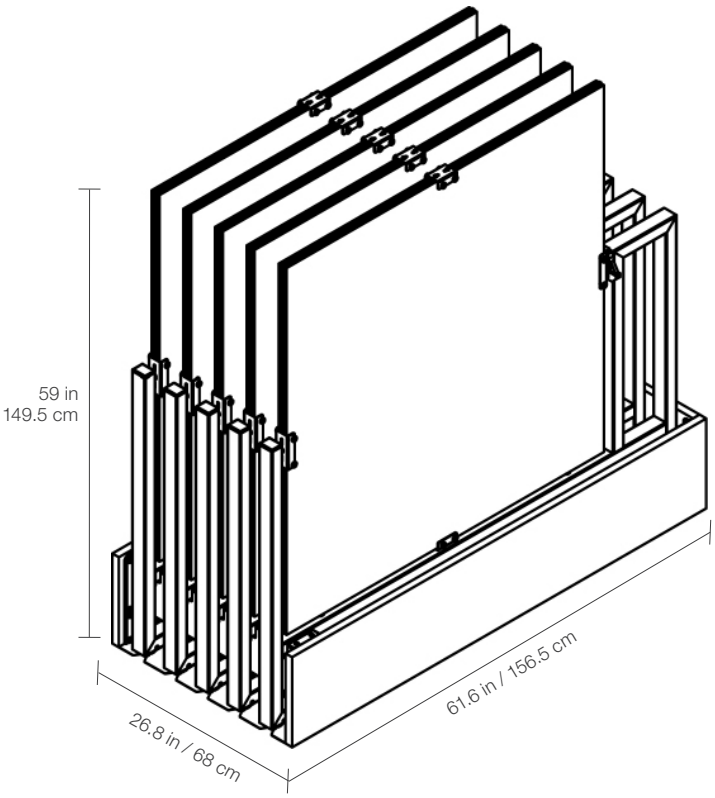

48 x 48 in / 120 x 120 cm Rotating Tile Floor Display

ITEM DESCRIPTION	ITEM CODE	UPC
Rotating 48 x 48 in / 120 x 120 cm Tile Display (fits 10 tiles)	9902-3105-0	828492096086
3 X 5.68 IN SAMPLE LABEL – 1 PC	9902-1702-0	828492076408

Labels can be ordered using the code above. Please specify the required colors and finishes when placing the order through your Anatolia Business Development Manager.

Rotating Tile Floor Display - 10 PC

36 x 36 in | 90 x 90 cm



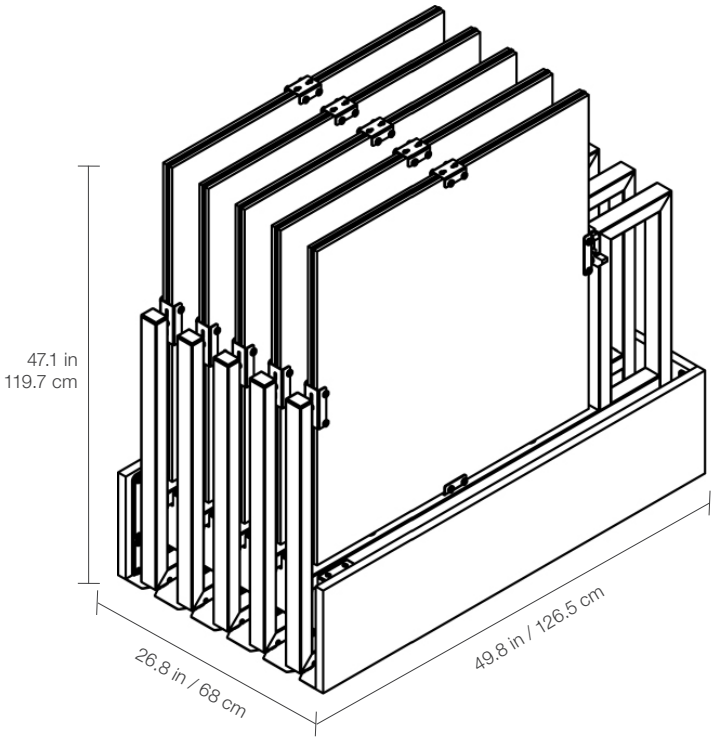

36 x 36 in / 90 x 90 cm Rotating Tile Floor Display

ITEM DESCRIPTION	ITEM CODE	UPC
Rotating 36 x 36 in / 90 x 90 cm Tile Display (fits 10 tiles)	9902-3104-0	828492096079
3 X 5.68 IN SAMPLE LABEL – 1 PC	9902-1702-0	828492076408

Labels can be ordered using the code above. Please specify the required colors and finishes when placing the order through your Anatolia Business Development Manager.

Rotating Tile Floor Display - 10 PC

24 x 48 in | 60 x 120 cm



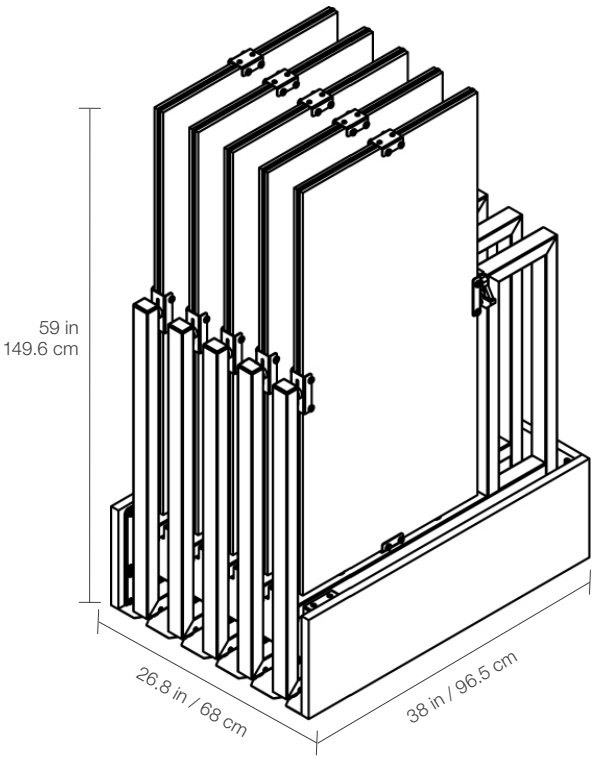

24 x 48 in / 60 x 120 cm Rotating Tile Floor Display

ITEM DESCRIPTION	ITEM CODE	UPC
Rotating 24 x 48 in / 60 x 120 cm Tile Display (fits 10 tiles)	9902-3106-0	828492096093
3 X 5.68 IN SAMPLE LABEL – 1 PC	9902-1702-0	828492076408

Labels can be ordered using the code above. Please specify the required colors and finishes when placing the order through your Anatolia Business Development Manager.

Rotating Tile Floor Display - 10 PC

36 x 72 in | 90 x 180 cm



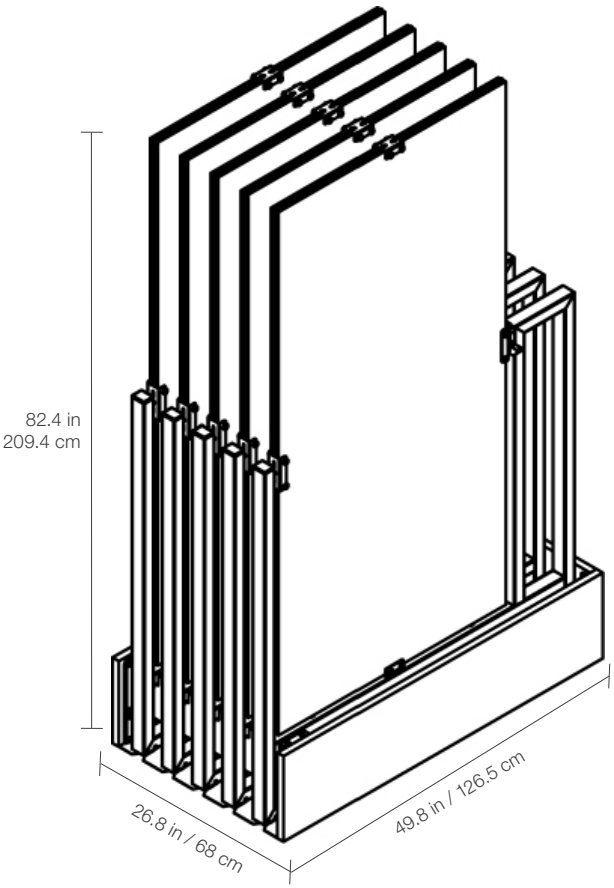

36 x 72 in / 90 x 180 cm Rotating Tile Floor Display

ITEM DESCRIPTION	ITEM CODE	UPC
Rotating 36 x 72 in / 90 x 180 cm Tile Display (fits 10 tiles)	9902-3107-0	828492096109
3 X 5.68 IN SAMPLE LABEL – 1 PC	9902-1702-0	828492076408

Labels can be ordered using the code above. Please specify the required colors and finishes when placing the order through your Anatolia Business Development Manager.

Sample Tile Tower Display - 40 PC and 80 PC

The Sample Tile Tower Display balances sophistication and practicality. The display showcases up to 80 sample tiles from our exclusive collections, with a more compact version available that holds up to 40 sample tiles. With clean lines and a wood-look finish, this display offers a polished, professional presentation, efficiently highlighting product details and color options from our premium range. The Sample Tile Tower Display is an elegant and versatile solution designed to feature either 12 x 24 in tiles, or 24 x 24 in tiles, showcasing Anatolia's exceptional designs. Both display towers can be configured to accommodate 24 x 24 in tiles with minor shelf adjustments, providing flexibility to showcase a variety of product assortments. Designed for maximum versatility, these configurations allow displays to be tailored to the specific product mix and merchandising needs of each showroom.

Small Tower
1. 40 - 12 x 24 in tiles
2. 24 - 12 x 24 in tiles + 8 - 24 x 24 in tiles
3. 8 - 12 x 24 in tiles + 16 - 24 x 24 in tiles

Large Tower
1. 80 - 12 x 24 in tiles
2. 48 - 12 x 24 in tiles + 16 - 24 x 24 in tiles
3. 16 - 12 x 24 in tiles + 32 - 24 x 24 in tiles

Display kits below feature only 12 x 24 in tiles, however custom assortments can be configured to accommodate 24 x 24 in sample tiles. For more information, please contact your Business Development Manager.

40 Sample Tile Tower Kit

ITEM CODE	ITEM DESCRIPTION	UPC
9901-0092-0	ANATOLIA 40 SAMPLE TILE TOWER KIT	828492116661
CONTENTS		
9902-3542-0	ANATOLIA SAMPLE TILE TOWER DISPLAY BASE (EMPTY) – 40 SLOTS	828492114445
40 - 12 X 24 INCH SAMPLE TILES		

80 Sample Tile Tower Kit

ITEM CODE	ITEM DESCRIPTION	UPC
9901-0093-0	ANATOLIA 80 SAMPLE TILE TOWER KIT	828492116678
CONTENTS		
9902-3541-0	ANATOLIA SAMPLE TILE TOWER DISPLAY BASE (EMPTY) – 80 SLOTS	828492114438
80 - 12 X 24 INCH SAMPLE TILES		



Sample Tile Tower Display, housing up to 40 12 x 24 in sample tiles.



Sample Tile Display, housing up to 80 12 x 24 in sample tiles.

80 Sample Tile Tower Kit Sets

SET ITEM CODE	DESCRIPTION	CONTENTS	ITEM CODES
9902-3662-0	ANATOLIA 80 SAMPLE TILE TOWER, TILE SET 1 - 6 PCS	12 X 24 IN / 30 X 60 CM MAJESTO ARABESCATO CORCHIA HONED RECTIFIED COLORSYNC PORCELAIN TILE	8500-0298-0
		12 X 24 IN / 30 X 60 CM MAJESTO ARABESCATO CORCHIA POLISHED RECTIFIED COLORSYNC PORCELAIN TILE	8500-0300-0
		12 X 24 IN / 30 X 60 CM MAJESTO ARIEL BIANCO HONED RECTIFIED COLORSYNC PORCELAIN TILE	8500-0301-0
		12 X 24 IN / 30 X 60 CM MAJESTO ARIEL BIANCO POLISHED RECTIFIED COLORSYNC PORCELAIN TILE	8500-0303-0
		12 X 24 IN / 30 X 60 CM MAJESTO BIANCO GIOIA VINTAGE RECTIFIED COLORSYNC PORCELAIN TILE	8500-0305-0
		12 X 24 IN / 30 X 60 CM MAJESTO BIANCO GIOIA POLISHED RECTIFIED COLORSYNC PORCELAIN TILE	8500-0306-0
9902-3663-0	ANATOLIA 80 SAMPLE TILE TOWER, TILE SET 2 - 6 PCS	12 X 24 IN / 30 X 60 CM MAJESTO BIANCO STRATURA HONED RECTIFIED COLORSYNC PORCELAIN TILE	8500-0307-0
		12 X 24 IN / 30 X 60 CM MAJESTO BIANCO STRATURA POLISHED RECTIFIED COLORSYNC PORCELAIN TILE	8500-0309-0
		12 X 24 IN / 30 X 60 CM MAJESTO CALACATTA BORGHINI VINTAGE RECTIFIED COLORSYNC PORCELAIN TILE	8500-0311-0
		12 X 24 IN / 30 X 60 CM MAJESTO CALACATTA CORCHIA HONED RECTIFIED COLORSYNC PORCELAIN TILE	8500-0313-0
		12 X 24 IN / 30 X 60 CM MAJESTO CALACATTA CORCHIA POLISHED RECTIFIED COLORSYNC PORCELAIN TILE	8500-0315-0
		12 X 24 IN / 30 X 60 CM MAJESTO CALACATTA CREMO HONED RECTIFIED COLORSYNC PORCELAIN TILE	8500-0316-0
9902-3664-0	ANATOLIA 80 SAMPLE TILE TOWER, TILE SET 3 - 6 PCS	12 X 24 IN / 30 X 60 CM MAJESTO CALACATTA CREMO POLISHED RECTIFIED COLORSYNC PORCELAIN TILE	8500-0318-0
		12 X 24 IN / 30 X 60 CM MAJESTO CALACATTA NOIR POLISHED RECTIFIED COLORSYNC PORCELAIN TILE	8500-0321-0
		12 X 24 IN / 30 X 60 CM MAJESTO CALACATTA ORO HONED RECTIFIED COLORSYNC PORCELAIN TILE	8500-0322-0
		12 X 24 IN / 30 X 60 CM MAJESTO CALACATTA ORO VINTAGE RECTIFIED COLORSYNC PORCELAIN TILE	8500-0323-0
		12 X 24 IN / 30 X 60 CM MAJESTO CEPPO DI GRE GRAINED RECTIFIED COLORSYNC PORCELAIN TILE	8500-0325-0
		12 X 24 IN / 30 X 60 CM MAJESTO CEPPO DI GRE ORGANIC MATTE RECTIFIED COLORSYNC PORCELAIN TILE	8500-0327-0
9902-3665-0	ANATOLIA 80 SAMPLE TILE TOWER, TILE SET 4 - 6 PCS	12 X 24 IN / 30 X 60 CM MAJESTO CRYSTAL BIANCO HONED RECTIFIED COLORSYNC PORCELAIN TILE	8500-0328-0
		12 X 24 IN / 30 X 60 CM MAJESTO CRYSTAL BIANCO POLISHED RECTIFIED COLORSYNC PORCELAIN TILE	8500-0330-0
		12 X 24 IN / 30 X 60 CM MAJESTO FORGE ELEGANZA VINTAGE RECTIFIED COLORSYNC PORCELAIN TILE	8500-0332-0
		12 X 24 IN / 30 X 60 CM MAJESTO FORGE ELEGANZA POLISHED RECTIFIED COLORSYNC PORCELAIN TILE	8500-0333-0
		12 X 24 IN / 30 X 60 CM MAJESTO FRENCH VANILLA HONED RECTIFIED COLORSYNC PORCELAIN TILE	8500-0334-0
		12 X 24 IN / 30 X 60 CM MAJESTO FRENCH VANILLA VINTAGE RECTIFIED COLORSYNC PORCELAIN TILE	8500-0335-0
9902-3666-0	ANATOLIA 80 SAMPLE TILE TOWER, TILE SET 5 - 6 PCS	12 X 24 IN / 30 X 60 CM MAJESTO STATUARIO HONED RECTIFIED COLORSYNC PORCELAIN TILE	8500-0400-0
		12 X 24 IN / 30 X 60 CM MAJESTO STATUARIO VINTAGE RECTIFIED COLORSYNC PORCELAIN TILE	8500-0401-0
		12 X 24 IN / 30 X 60 CM MAJESTO TAJ MAHAL HONED RECTIFIED COLORSYNC PORCELAIN TILE	8500-0403-0
		12 X 24 IN / 30 X 60 CM MAJESTO TAJ MAHAL POLISHED RECTIFIED COLORSYNC PORCELAIN TILE	8500-0405-0
		12 X 24 IN / 30 X 60 CM MAJESTO TRAVERTINO CLASSICO GRAINED RECTIFIED COLORSYNC PORCELAIN TILE	8500-0406-0
		12 X 24 IN / 30 X 60 CM MAJESTO TRAVERTINO CLASSICO ORGANIC MATTE RECTIFIED COLORSYNC PORCELAIN TILE	8500-0408-0
9902-3667-0	ANATOLIA 80 SAMPLE TILE TOWER, TILE SET 6 - 6 PCS	12 X 24 IN / 30 X 60 CM MAJESTO TRAVERTINO TITANIUM HONED RECTIFIED COLORSYNC PORCELAIN TILE	8500-0410-0
		12 X 24 IN / 30 X 60 CM MAJESTO TRAVERTINO TITANIUM ORGANIC MATTE RECTIFIED COLORSYNC PORCELAIN TILE	8500-0411-0
		12 X 24 IN / 30 X 60 CM MAJESTO PIETRA IMPERIALE POLISHED RECTIFIED COLORSYNC PORCELAIN TILE	8500-0640-0
		12 X 24 IN / 30 X 60 CM MAJESTO PIETRA IMPERIALE VINTAGE RECTIFIED COLORSYNC PORCELAIN TILE	8500-0641-0
		12 X 24 IN / 30 X 60 CM SERENA CRATER ORGANIC MATTE RECTIFIED COLORSYNC PORCELAIN TILE	8500-0383-0
		12 X 24 IN / 30 X 60 CM SERENA CRATER VINTAGE RECTIFIED COLORSYNC PORCELAIN TILE	8500-0384-0
9902-3668-0	ANATOLIA 80 SAMPLE TILE TOWER, TILE SET 7 - 6 PCS	12 X 24 IN / 30 X 60 CM SERENA DUSK HONED RECTIFIED COLORSYNC PORCELAIN TILE	8500-0385-0
		12 X 24 IN / 30 X 60 CM SERENA DUSK ORGANIC MATTE RECTIFIED COLORSYNC PORCELAIN TILE	8500-0386-0
		12 X 24 IN / 30 X 60 CM SERENA FLINT HONED RECTIFIED COLORSYNC PORCELAIN TILE	8500-0388-0
		12 X 24 IN / 30 X 60 CM SERENA FLINT ORGANIC MATTE RECTIFIED COLORSYNC PORCELAIN TILE	8500-0413-0
		12 X 24 IN / 30 X 60 CM SERENA PEWTER HONED RECTIFIED COLORSYNC PORCELAIN TILE	8500-0391-0
		12 X 24 IN / 30 X 60 CM SERENA PEWTER ORGANIC MATTE RECTIFIED COLORSYNC PORCELAIN TILE	8500-0392-0

80 Sample Tile Tower Kit Sets

SET ITEM CODE	DESCRIPTION	CONTENTS	ITEM CODES
9902-3669-0	ANATOLIA 80 SAMPLE TILE TOWER, TILE SET 8 - 6 PCS	12 X 24 IN / 30 X 60 CM SERENA SHALE ORGANIC MATTE RECTIFIED COLORSYNC PORCELAIN TILE	8500-0395-0
		12 X 24 IN / 30 X 60 CM SERENA SHALE VINTAGE RECTIFIED COLORSYNC PORCELAIN TILE	8500-0396-0
		12 X 24 IN / 30 X 60 CM SERENA VALLEY HONED RECTIFIED COLORSYNC PORCELAIN TILE	8500-0397-0
		12 X 24 IN / 30 X 60 CM SERENA VALLEY ORGANIC MATTE RECTIFIED COLORSYNC PORCELAIN TILE	8500-0398-0
		12 X 24 IN / 30 X 60 CM LITHOFORM CROSSCUT COAST HONED RECTIFIED COLORSYNC PORCELAIN TILE	8500-0337-0
		12 X 24 IN / 30 X 60 CM LITHOFORM CROSSCUT COAST VINTAGE RECTIFIED COLORSYNC PORCELAIN TILE	8500-0339-0
9902-3670-0	ANATOLIA 80 SAMPLE TILE TOWER, TILE SET 9 - 6 PCS	12 X 24 IN / 30 X 60 CM LITHOFORM VEINCUT COAST HONED RECTIFIED COLORSYNC PORCELAIN TILE	8500-0340-0
		12 X 24 IN / 30 X 60 CM LITHOFORM VEINCUT COAST ORGANIC MATTE RECTIFIED COLORSYNC PORCELAIN TILE	8500-0341-0
		12 X 24 IN / 30 X 60 CM LITHOFORM CROSSCUT DUNES HONED RECTIFIED COLORSYNC PORCELAIN TILE	8500-0343-0
		12 X 24 IN / 30 X 60 CM LITHOFORM CROSSCUT DUNES VINTAGE RECTIFIED COLORSYNC PORCELAIN TILE	8500-0345-0
		12 X 24 IN / 30 X 60 CM LITHOFORM VEINCUT DUNES ORGANIC MATTE RECTIFIED COLORSYNC PORCELAIN TILE	8500-0347-0
		12 X 24 IN / 30 X 60 CM LITHOFORM VEINCUT DUNES VINTAGE RECTIFIED COLORSYNC PORCELAIN TILE	8500-0348-0
9902-3671-0	ANATOLIA 80 SAMPLE TILE TOWER, TILE SET 10 - 6 PCS	12 X 24 IN / 30 X 60 CM LITHOFORM CROSSCUT TWILIGHT HONED RECTIFIED COLORSYNC PORCELAIN TILE	8500-0349-0
		12 X 24 IN / 30 X 60 CM LITHOFORM CROSSCUT TWILIGHT ORGANIC MATTE RECTIFIED COLORSYNC PORCELAIN TILE	8500-0350-0
		12 X 24 IN / 30 X 60 CM LITHOFORM VEINCUT TWILIGHT HONED RECTIFIED COLORSYNC PORCELAIN TILE	8500-0352-0
		12 X 24 IN / 30 X 60 CM LITHOFORM VEINCUT TWILIGHT VINTAGE RECTIFIED COLORSYNC PORCELAIN TILE	8500-0354-0
		12 X 24 IN / 30 X 60 CM LITHOFORM CROSSCUT VISTA HONED RECTIFIED COLORSYNC PORCELAIN TILE	8500-0355-0
		12 X 24 IN / 30 X 60 CM LITHOFORM CROSSCUT VISTA VINTAGE RECTIFIED COLORSYNC PORCELAIN TILE	8500-0357-0
9902-3672-0	ANATOLIA 80 SAMPLE TILE TOWER, TILE SET 11- 6 PCS	12 X 24 IN / 30 X 60 CM LITHOFORM VEINCUT VISTA ORGANIC MATTE RECTIFIED COLORSYNC PORCELAIN TILE	8500-0359-0
		12 X 24 IN / 30 X 60 CM LITHOFORM VEINCUT VISTA VINTAGE RECTIFIED COLORSYNC PORCELAIN TILE	8500-0360-0
		12 X 24 IN / 30 X 60 CM LUSTRA ONYX CREMA POLISHED RECTIFIED COLORSYNC PORCELAIN TILE	8500-0372-0
		12 X 24 IN / 30 X 60 CM LUSTRA ONYX SAGE HONED RECTIFIED COLORSYNC PORCELAIN TILE	8500-0373-0
		12 X 24 IN / 30 X 60 CM LUSTRA ONYX HAZEL HONED RECTIFIED COLORSYNC PORCELAIN TILE	8500-0376-0
		12 X 24 IN / 30 X 60 CM LUSTRA ONYX FEATHER POLISHED RECTIFIED COLORSYNC PORCELAIN TILE	8500-0692-0
9902-3673-0	ANATOLIA 80 SAMPLE TILE TOWER, TILE SET 12- 6 PCS	12 X 24 IN / 30 X 60 CM MONOFORMA MOONLIGHT POLISHED RECTIFIED UNGLAZED PORCELAIN TILE	8500-0362-0
		12 X 24 IN / 30 X 60 CM MONOFORMA OASIS SILK RECTIFIED UNGLAZED PORCELAIN TILE	8500-0365-0
		12 X 24 IN / 30 X 60 CM MONOFORMA SILHOUETTE POLISHED RECTIFIED UNGLAZED PORCELAIN TILE	8500-0366-0
		12 X 24 IN / 30 X 60 CM MONOFORMA STORM POLISHED RECTIFIED UNGLAZED PORCELAIN TILE	8500-0368-0
		12 X 24 IN / 30 X 60 CM ARCHITEQ SMOKE ORGANIC MATTE RECTIFIED COLORSYNC PORCELAIN TILE	8500-0697-0
		12 X 24 IN / 30 X 60 CM ARCHITEQ MICRO MIST ORGANIC MATTE RECTIFIED COLORSYNC PORCELAIN TILE	8500-0705-0
9902-3674-0	ANATOLIA 80 SAMPLE TILE TOWER, TILE SET 13 - 6 PCS	12 X 24 IN / 30 X 60 CM ARCHITEQ MICRO BONE ORGANIC MATTE RECTIFIED COLORSYNC PORCELAIN TILE	8500-0713-0
		12 X 24 IN / 30 X 60 CM ARCHITEQ MICRO SAND ORGANIC MATTE RECTIFIED COLORSYNC PORCELAIN TILE	8500-0721-0
		12 X 24 IN / 30 X 60 CM ARCHITEQ MICRO CLAY ORGANIC MATTE RECTIFIED COLORSYNC PORCELAIN TILE	8500-0729-0
		12 X 24 IN / 30 X 60 CM ARCHITEQ MICRO EARTH ORGANIC MATTE RECTIFIED COLORSYNC PORCELAIN TILE	8500-0737-0
		12 X 24 IN / 30 X 60 CM ARCHITEQ MICRO GRAPHITE ORGANIC MATTE RECTIFIED COLORSYNC PORCELAIN TILE	8500-0745-0
		12 X 24 IN / 30 X 60 CM ARCHITEQ MICRO COCOA ORGANIC MATTE RECTIFIED COLORSYNC PORCELAIN TILE	8500-0753-0
9902-3675-0	ANATOLIA 80 SAMPLE TILE TOWER, TILE SET 14 - 2 PCS	12 X 24 IN / 30 X 60 CM ARCHITEQ MICRO MOSS ORGANIC MATTE RECTIFIED COLORSYNC PORCELAIN TILE	8500-0761-0
		12 X 24 IN / 30 X 60 CM ARCHITEQ MICRO STORM ORGANIC MATTE RECTIFIED COLORSYNC PORCELAIN TILE	8500-0765-0

40 Sample Tile Tower Kit Sets

SET ITEM CODE	DESCRIPTION	CONTENTS	ITEM CODES
9902-3655-0	ANATOLIA 40 SAMPLE TILE TOWER, TILE SET 1 - 6 PCS	12 X 24 IN / 30 X 60 CM MAJESTO ARABESCATO CORCHIA POLISHED RECTIFIED COLORSYNC PORCELAIN TILE	8500-0300-0
		12 X 24 IN / 30 X 60 CM MAJESTO ARIEL BIANCO HONED RECTIFIED COLORSYNC PORCELAIN TILE	8500-0301-0
		12 X 24 IN / 30 X 60 CM MAJESTO BIANCO GIOIA VINTAGE RECTIFIED COLORSYNC PORCELAIN TILE	8500-0305-0
		12 X 24 IN / 30 X 60 CM MAJESTO CALACATTA BORGHINI POLISHED RECTIFIED COLORSYNC PORCELAIN TILE	8500-0312-0
		12 X 24 IN / 30 X 60 CM MAJESTO CALACATTA CORCHIA HONED RECTIFIED COLORSYNC PORCELAIN TILE	8500-0313-0
		12 X 24 IN / 30 X 60 CM MAJESTO CALACATTA CREMO POLISHED RECTIFIED COLORSYNC PORCELAIN TILE	8500-0318-0
9902-3656-0	ANATOLIA 40 SAMPLE TILE TOWER, TILE SET 2 - 6 PCS	12 X 24 IN / 30 X 60 CM MAJESTO CALACATTA NOIR VINTAGE RECTIFIED COLORSYNC PORCELAIN TILE	8500-0320-0
		12 X 24 IN / 30 X 60 CM MAJESTO CALACATTA ORO HONED RECTIFIED COLORSYNC PORCELAIN TILE	8500-0322-0
		12 X 24 IN / 30 X 60 CM MAJESTO CEPPO DI GRE ORGANIC MATTE RECTIFIED COLORSYNC PORCELAIN TILE	8500-0327-0
		12 X 24 IN / 30 X 60 CM MAJESTO CRYSTAL BIANCO HONED RECTIFIED COLORSYNC PORCELAIN TILE	8500-0328-0
		12 X 24 IN / 30 X 60 CM MAJESTO FORGE ELEGANZA POLISHED RECTIFIED COLORSYNC PORCELAIN TILE	8500-0333-0
		12 X 24 IN / 30 X 60 CM MAJESTO FRENCH VANILLA VINTAGE RECTIFIED COLORSYNC PORCELAIN TILE	8500-0335-0
9902-3657-0	ANATOLIA 40 SAMPLE TILE TOWER, TILE SET 3 - 6 PCS	12 X 24 IN / 30 X 60 CM MAJESTO STATUARIO HONED RECTIFIED COLORSYNC PORCELAIN TILE	8500-0400-0
		12 X 24 IN / 30 X 60 CM MAJESTO TAJ MAHAL POLISHED RECTIFIED COLORSYNC PORCELAIN TILE	8500-0405-0
		12 X 24 IN / 30 X 60 CM MAJESTO TRAVERTINO CLASSICO ORGANIC MATTE RECTIFIED COLORSYNC PORCELAIN TILE	8500-0408-0
		12 X 24 IN / 30 X 60 CM MAJESTO TRAVERTINO TITANIUM HONED RECTIFIED COLORSYNC PORCELAIN TILE	8500-0410-0
		12 X 24 IN / 30 X 60 CM MAJESTO PIETRA IMPERIALE POLISHED RECTIFIED COLORSYNC PORCELAIN TILE	8500-0640-0
		12 X 24 IN / 30 X 60 CM SERENA CRATER HONED RECTIFIED COLORSYNC PORCELAIN TILE	8500-0382-0
9902-3658-0	ANATOLIA 40 SAMPLE TILE TOWER, TILE SET 4 - 6 PCS	12 X 24 IN / 30 X 60 CM SERENA FLINT VINTAGE RECTIFIED COLORSYNC PORCELAIN TILE	8500-0390-0
		12 X 24 IN / 30 X 60 CM SERENA PEWTER HONED RECTIFIED COLORSYNC PORCELAIN TILE	8500-0391-0
		12 X 24 IN / 30 X 60 CM SERENA VALLEY VINTAGE RECTIFIED COLORSYNC PORCELAIN TILE	8500-0399-0
		12 X 24 IN / 30 X 60 CM LITHOFORM CROSSCUT COAST HONED RECTIFIED COLORSYNC PORCELAIN TILE	8500-0337-0
		12 X 24 IN / 30 X 60 CM LITHOFORM VEINCUT COAST ORGANIC MATTE RECTIFIED COLORSYNC PORCELAIN TILE	8500-0341-0
		12 X 24 IN / 30 X 60 CM LITHOFORM CROSSCUT DUNES VINTAGE RECTIFIED COLORSYNC PORCELAIN TILE	8500-0345-0
9902-3659-0	ANATOLIA 40 SAMPLE TILE TOWER, TILE SET 5 - 6 PCS	12 X 24 IN / 30 X 60 CM LITHOFORM VEINCUT DUNES HONED RECTIFIED COLORSYNC PORCELAIN TILE	8500-0346-0
		12 X 24 IN / 30 X 60 CM LITHOFORM CROSSCUT TWILIGHT ORGANIC MATTE RECTIFIED COLORSYNC PORCELAIN TILE	8500-0350-0
		12 X 24 IN / 30 X 60 CM LITHOFORM VEINCUT TWILIGHT VINTAGE RECTIFIED COLORSYNC PORCELAIN TILE	8500-0354-0
		12 X 24 IN / 30 X 60 CM LITHOFORM CROSSCUT VISTA ORGANIC MATTE RECTIFIED COLORSYNC PORCELAIN TILE	8500-0356-0
		12 X 24 IN / 30 X 60 CM LITHOFORM VEINCUT VISTA HONED RECTIFIED COLORSYNC PORCELAIN TILE	8500-0358-0
		12 X 24 IN / 30 X 60 CM LUSTRA ONYX CREMA POLISHED RECTIFIED COLORSYNC PORCELAIN TILE	8500-0372-0
9902-3660-0	ANATOLIA 40 SAMPLE TILE TOWER, TILE SET 6 - 6 PCS	12 X 24 IN / 30 X 60 CM LUSTRA ONYX SAGE HONED RECTIFIED COLORSYNC PORCELAIN TILE	8500-0373-0
		12 X 24 IN / 30 X 60 CM MONOFORMA MOONLIGHT POLISHED RECTIFIED UNGLAZED PORCELAIN TILE	8500-0362-0
		12 X 24 IN / 30 X 60 CM MONOFORMA OASIS SILK RECTIFIED UNGLAZED PORCELAIN TILE	8500-0365-0
		12 X 24 IN / 30 X 60 CM MONOFORMA SILHOUETTE SILK RECTIFIED UNGLAZED PORCELAIN TILE	8500-0367-0
		12 X 24 IN / 30 X 60 CM MONOFORMA STORM POLISHED RECTIFIED UNGLAZED PORCELAIN TILE	8500-0368-0
		12 X 24 IN / 30 X 60 CM ARCHITEQ MICRO MIST ORGANIC MATTE RECTIFIED COLORSYNC PORCELAIN TILE	8500-0705-0
9902-3661-0	ANATOLIA 40 SAMPLE TILE TOWER, TILE SET 7 - 4 PCS	12 X 24 IN / 30 X 60 CM ARCHITEQ MICRO BONE ORGANIC MATTE RECTIFIED COLORSYNC PORCELAIN TILE	8500-0713-0
		12 X 24 IN / 30 X 60 CM ARCHITEQ MICRO EARTH ORGANIC MATTE RECTIFIED COLORSYNC PORCELAIN TILE	8500-0737-0
		12 X 24 IN / 30 X 60 CM ARCHITEQ MICRO GRAPHITE ORGANIC MATTE RECTIFIED COLORSYNC PORCELAIN TILE	8500-0745-0
		12 X 24 IN / 30 X 60 CM ARCHITEQ MICRO COCOA ORGANIC MATTE RECTIFIED COLORSYNC PORCELAIN TILE	8500-0753-0

Archive Bin Display

Anatolia has developed a compact floor display designed to efficiently organize and present collection display boards within a minimal footprint. The display houses boards that can be easily picked up and moved using integrated cut-out handles, making them ideal for design discussions with clients. With its rich dark wood finish complemented by sleek black metallic accents, this display exudes sophistication and is designed to make a striking statement in any showroom setting.

Anatolia's display boards are thoughtfully designed to be compact, durable, and easy to handle. The front of each board showcases a variety of available formats, while the back features elegant room scenes specific to each collection, along with technical specifications including sizes, finishes available, and usage recommendations. The display is supplied empty, with collection boards available to order and customize to suit your assortment.

DISPLAY CAPACITIES:
18 x 26 in Boards - 34
25.5 x 26 in Boards - 22
13 x 18 in Boards - 44



Classic Archive Bin Display

ITEM CODE	ITEM DESCRIPTION	UPC
9902-3543-0	ARCHIVE BIN DISPLAY (EMPTY)	828492114452





Classic Archive Bin at a glance

Classic Archive Bin Board Sets

ITEM CODE	ITEM DESCRIPTION	UPC
9902-3610-0	Anatolia 18 x 26 in Lumino Display Board Set 1 (4 Boards)	828492114230
9902-3611-0	Anatolia 18 x 26 in Lumino Display Board Set 2 (4 Boards)	828492114223
9902-3612-0	Anatolia 18 x 26 in Locale Display Board Set (4 Boards)	828492114216
9902-3613-0	Anatolia 18 x 26 in Artifact Display Board Set (4 Boards)	828492114209
9902-3614-0	Anatolia 18 x 26 in Coliseo Display Board Set (4 Boards)	828492114193
9902-3615-0	Anatolia 18 x 26 in Plata Display Board Set (4 Boards)	828492114186
9902-3616-0	Anatolia 18 x 26 in Davenport Display Board Set (4 Boards)	828492114179
9902-3617-0	Anatolia 18 x 26 in Regency Display Board Set (4 Boards)	828492114162
9902-3618-0	Anatolia 18 x 26 in Nexus Display Board Set (4 Boards)	828492114155
9902-3619-0	Anatolia 18 x 26 in Torino Display Board Set (4 Boards)	828492114148
9902-3620-0	Anatolia 18 x 26 in Muskoka Display Board Set (4 Boards)	828492114131
9902-3621-0	Anatolia 18 x 26 in Soho Display Board Set 1 (4 Boards)	828492114124
9902-3622-0	Anatolia 18 x 26 in Soho Display Board Set 2 (4 Boards)	828492114117
9902-3623-0	Anatolia 18 x 26 in Mayfair Display Board Set 1 (4 Boards)	828492114100
9902-3624-0	Anatolia 18 x 26 in Mayfair Display Board Set 2 (3 Boards)	828492114094
9902-3625-0	Anatolia 18 x 26 in Mayfair Display Board Set 3 (3 Boards)	828492114087
9902-3626-0	Anatolia 18 x 26 in Linea / Altezza / Purity Display Board Set (3 Boards)	828492114070

Discover more at

anatolia.com

info@anatolia.com
1.877.311.3434